CUSTOMER: _____

REFERENCE: _____

GETINGE
GETINGE GROUP

# 700 SERIES LOADING ACCESSORIES

## PRODUCT SPECIFICATION

### PRODUCT

The 700 series sterilizers can be fitted with either a rack with extendible shelves *or* a load car with a companion transfer carriage for steam applications. Either accessory can be factory installed or field fitted.

### QUALITY STATEMENT

Confidence in the Getinge Group is the most important quality criterion. This must be the hallmark of all our external and internal commitments, activities and products. Products and services supplied by Getinge must conform to the agreed terms and expectations to ensure recommendations for further business. The achievement of these quality goals is the basis for a continued competitive and successful enterprise.

### CHAMBER SIZE (W x H x L)

- 26.5" x 36" x 39" (674mm x 922mm x 1000mm)
- 26.5" x 36" x 53" (674mm x 922mm x 1350mm)
- 26.5" x 36" x 61" (674mm x 922mm x 1550mm)

### ACCESSORIES

- Transfer Carriage
- Load Car with a fixed base shelf, two adjustable shelves and four side rails
  - Extra Shelf
  - Extra Side-load Rail (ea)
- Rack with three extendible Shelves
  - Extra Shelf
  - Extra Shelf Supports (pair)
- Kit to modify existing Transfer Carriages

### TRANSFER CARRIAGE

The transfer carriage is designed to be universal and compatible with previous Castle sterilizers of similar size.The transfer carriage is fabricated of formed stainless steel sections and rectangular stainless steel tubing, with high impact phenolic threaded casters. The height is adjustable via the threaded casters. The front casters are fixed, while the rear casters are swivel ball bearing, one with a brake. Nylon bumpers extend from the latching mechanism for protection. A self-centering latch provides alignment, and securely locks the carriage to the sterilizer for an easy and safe transfer of the load. A locking mechanism holds the load car securely on the transfer carriage. Two separate release mechanisms are provided to: a) disengage the load car from the transfer carriage; and b) disengage the transfer carriage from the sterilizer. Both release mechanisms can be either hand or knee operated.

### LOAD CAR

The load car is designed to fit both the 200 Series and 700 Series sterilizers.The frame is constructed of tubular stainless steel, fitted to 12 gauge (2.7mm) SST channels. The load car is supplied with a fixed bottom shelf, for use as a flat bed, plus (2) adjustable SST shelves. Each adjustable shelf has a pair of side rails and easily accommodates various shapes and sizes and eight adjustable shelving elevations, spaced 2 11/16" (68mm), are provided to meet various item heights. The side rails are full length and easily adjusted to hold processed items within the frame of the load car.

### RACK AND EXTENDIBLE SHELVES

The interior rack is common for both single and double door models, allowing equal shelf extension from each end of a double door chamber. Three adjustable stainless steel shelves are provided, with five adjustable shelving elevations, spaced at 5 1/8" (130mm), which can be quickly and easily relocated without the use of tools. The shelves can be extended approximately 50% for ease of loading and unloading. A stop prevents the shelf from extending beyond its safety limit.

### UPGRADE KIT

For customers who have existing Transfer Carriages, two kits are available to upgrade for interchangeability depending on manufacturing date.

1) For 3600 Transfer Carriage (all stainless steel construction) PN61301608861
2) For 3400 Transfer Carriage (painted grey enamel) PN61301609059

## 200 and 700 Load Car Universal Transfer Carriage

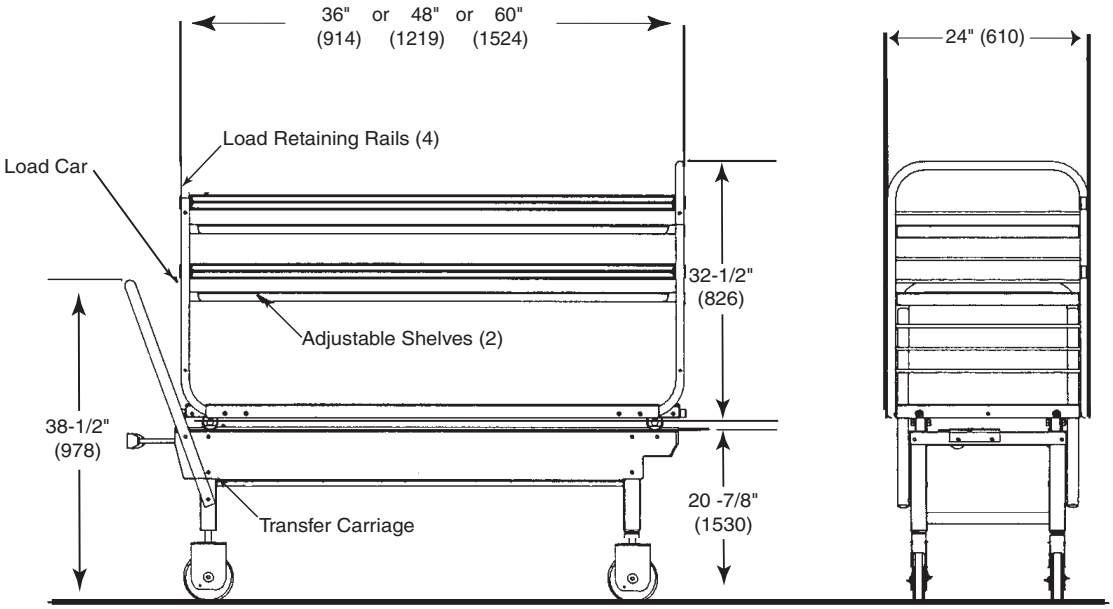


## 700 Series Interior Rack and Shelves

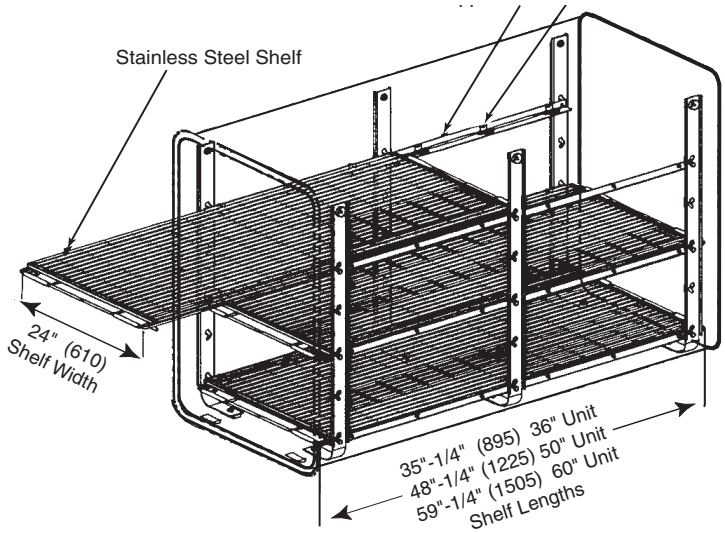


Dimensions are in inches (Millimeters) - Drawing is not to scale

GETINGE

GETINGE GROUP

**Getinge USA, Inc**
1777 East Henrietta Road
Rochester, New York 14623-3133
USA
Phone: (800) 475-9040
Fax: (585) 272-5033
info@getingeusa.com
www.getinge.com

**Getinge Canada Ltd.**
1575 South Gateway Road, Unit C
Mississauga, Ontario L4W 5J1
Canada
Phone: (905) 629-8777
info@getingeusa.com
www.getinge.com

GETINGE GROUP is a leading global provider of equipment and systems that contribute to quality enhancement and cost efficiency within healthcare and life sciences. We operate under the three brands of ArjoHuntleigh, GETINGE and MAQUET. **ArjoHuntleigh** focuses on patient handling and hygiene, disinfection, DVT prevention, medical beds, therapeutic surfaces and diagnostics. **GETINGE** provides solutions for infection control within Healthcare and contamination prevention within Life Sciences. **MAQUET** specializes in therapeutic applications, products, solutions and services for OR and ICU.

DS700LOAD 0210 Arjo, Getinge and MAQUET are registered trademarks. Printed in U.S.A. Getinge is constantly reviewing its products for improvements. Consequently, the actual product may differ slightly from the product pictured and described here.