OPMI® Neuro/NC 4 System
The Standard of Excellence

ZEISS

Carl Zeiss: five decades of innovation

Carl Zeiss and the techniques that advance microsurgery... a name and accomplishments inextricably linked for nearly half a century.

1953 – Introduction of the first Carl Zeiss surgical microscope, the OPMI 1, ushers in the era of microsurgery.

1975 – Launch of the radical Contraves® NC Suspension System. This trend-setting design was the catalyst that brought forth the rapid adoption of microsurgical technique in Neurosurgery.

1993 – Carl Zeiss launches another pioneering effort – the integration of the microscope with image guided technique, now an essential component of every major image guided system.

OPMI Neuro/NC 4 System: the tradition continues

No less can be said about Carl Zeiss' latest development – the OPMI Neuro/NC 4 System impressively continues our tradition of technological leadership in the field of microsurgery.

Every facet of the NC 4's predecessor systems was studied relentlessly by Carl Zeiss engineers and product developers. After improving upon essential components such as optics and ease of movement, ingenious "firsts" such as the integrated Heads-Up display and AutoFocus were added to ensure optimum support for new techniques such as image guided microsurgery.

The neurosurgical community has validated Carl Zeiss' efforts by making the OPMI Neuro/NC 4 the most successful neurosurgical system in Zeiss' history, and by quickly establishing it as the system of choice for integration with every major image guided system.

(far left) The unique two-way light path reduces shadows in deep cavities, especially useful for procedures requiring minimal exposure or key-hole techniques.

(left) The Superlux 301 brilliantly illuminates the surgical field with 300 watts of Xenon, daylight quality light. If a lamp fails, a Halogen backup light source is immediately available. Xenon lamp module changes take just seconds and do not require tools or a technician.

Carl Zeiss Optics: because image is everything

Legendary optics have always been the hallmark of surgical microscopes from Carl Zeiss. Dedication to delivering the newest in optical concepts is why Carl Zeiss is the leader in products for microsurgery.

The OPMI Neuro again provided engineers at Carl Zeiss with a vehicle for realizing their newest optical concepts. The entire optical system now features apochromatic coatings, ensuring outstanding color fidelity free of distortions. Imagery is so razor-sharp and crisp with such an unprecedented level of detail, surgeons have been left speechless.

A completely new zoom design is responsible for the OPMI Neuro's breathtaking depth of field. The ability to see the entire surgical field in focus from top to bottom, even at medium magnification levels, offers many benefits. Reduced eye strain and fatigue, less refocusing and crisp documentation all clearly lead to an improved surgical workflow.

When there is an occasional need to refocus, Carl Zeiss' unique AutoFocus technology quickly produces a perfect image every time. Once in focus, the image remains clear regardless of zoom setting.

The OPMI Neuro's new zoom system also transmits so much light, surgeons have reportedly started operating without engaging the illumination system. Amazing light transmission provides benefits to the patient as well: less light means the amount of energy deposited on the tissue is reduced.

Illumination is not only plentiful, its delivery is optimized. To ensure that only the area of interest is lighted, a spot illumination system permits the light to be coned. In addition, the unique two-way light path reduces shadows in deep cavities for those cases requiring key-hole techniques.

Take a stand for efficiency and convenience

Precision optics and ergonomics – together ensuring ease of use

An optical system that delivers incredible, breathtaking images and brilliant illumination is only a portion of what constitutes an outstanding microscope system. In order to be absorbed naturally into the surgical arena, the microscope needs a "silent partner" committed to complementing the surgeon's every move as transparently, ergonomically and efficiently as possible.

It is this insight that guided the NC 4 Floorstand's rigorous development cycle. The renowned Contraves counterbalancing technology which permits the OPMI to glide through the air as if weightless, has been thoroughly enhanced. The System's weights are now complemented by springs, eliminating not only a significant part of the floorstand's mass, but also greatly reducing inertia. This ensures that movement using one hand or the mouthswitch is as smooth and effortless as possible.

Equally important during setup and transport are the System's ergonomic features. The NC 4's unique FlexiTrak™ base ensures a smooth and collision-free transport from room to room while also allowing precise movement in any direction, once the OPMI Neuro is near the OR table or in the surgical field.

Balancing the OPMI Neuro/NC 4 System is virtually a thing of the past. All of the OPMI Neuro's key accessories are integrated, therefore System setup changes and rebalancing between cases is no longer necessary. Should the System require rebalancing, four quick and simple steps ensure a perfect balance, without the need for tools.

(above) The classic Carl Zeiss binocular dovetail enables rotation and angling of the main binocular as required by your surgical technique, always permitting an ergonomic position throughout the procedure.

(top) The NC 4's elegant design is not just pleasing to the eye – the smooth, closed surfaces are free of difficult to clean corners and materials.

(right) FlexiTrak technology ensures easy and collision-free travel between OR suites while still providing quick and flexible movement in any direction, when positioning within the OR – a truly unique feature everyone can appreciate.

The power is in your hands

The OPMI Neuro/NC 4 System's controls were designed with the user in mind. The handgrips, for example, provide access to every key microscope function thus ensuring an assistant is not required while the surgeon is autofocusing, taking photographs or using other documentation features.

Equally as important, handgrips are mounted so that they do not protrude below the OPMI, greatly reducing collisions when passing instruments in and out of the surgical field. And, handgrip adjustment couldn't be easier – by loosening and then refastening a single lever, the entire handgrip can be adjusted even under the surgical drape. Handgrips can be rotated 180 degrees, permitting one handgrip to always face each surgeon for easy access.

(left) The OPMI can be rotated completely around its axis (470°) allowing the NC 4 base to be placed anywhere, including directly behind the main surgeon in the "over-head" position.

Adaptable to every application

(left) The NC 4's height and reach allow positioning of the System anywhere relative to the surgeon – a critical issue in today's increasingly crowded OR.

The Carl Zeiss Building Block Principle – a solution for every configuration

Although many key options that are today standard accessories in every neurosurgical OR were integrated into the OPMI Neuro, the time-honored Carl Zeiss Building Block Principle still allows customization to meet special procedures or techniques that a subspecialty requires.

(above right) Rotation of both binoculars in cross-table procedures ensures proper ergonomic positioning, even when the OPMI is positioned at an angle.

(right) By inverting the rear binocular, surgeons of different heights can easily and comfortably operate.

(right) Posterior Fossa (sitting position) or transphenoidal procedures are easily configured thanks to the OPMI Neuro's full tilt range and compact, integrated design.

(below right) Build height can be further reduced by 50 mm when exchanging the inclinable binocular with a straight binocular tube.

(above) Most craniotomies are best approached with the stereo co-observation tube in one of the side ports and the OPMI angled between 0 and 45 degrees.

A microscope to match your versatility

The OPMI Neuro was designed to accommodate virtually any neurosurgical setup and has undergone rigorous testing to be certain. For cross-table, face-to-face procedures, the NC 4 can be placed conveniently behind the surgeon in the over-head position. The rear assistant's binocular can be mounted at two different heights, accommodating two surgeons of the same height, or two that are significantly different. In these cases, both the main and assistant's binocular can be rotated for optimal surgeon ergonomics.

Setup for procedures with the patient in the sitting position is easy thanks to the OPMI Neuro's generous tilt angles. The integrated design maintains an even shorter realistic build height when compared with other systems sold today.

For those cases demanding an absolute minimum in build height, the standard 0-180 degree binocular can be substituted for a straight one, thus saving 50 mm.

Standard craniotomies are best served with the stereo co-observation tube, a straight or inclined binocular tube and the OPMI angled between 0 and 45 degrees.

One microscope for every image guided platform

- BrainLAB
- CBYON
- Medtronic SNT
- Radionics
- Visualization Technology
- ... and others

(below) Key diagnostic data is identified on the work-station and then projected onto the surgical anatomy by the OPMI Neuro's unmatched superimposing system.

(right) The unique, easy to use connector, integrated superimposing system, and pre-installed internal wiring ensure that connecting your IGS system is quick and easy without disturbing function or adding clutter, as with other microscopes.

Seamless integration gives you maximum flexibility

Over the course of the last several years, Neurosurgery has experienced a tremendous growth in the uses and applications for image guided surgery (IGS) techniques. One important application is the integration of the microscope into the IGS system. The microscope is the only omnipresent instrument in microsurgical cases and should therefore logically be used, to identify the surgeon's current working area. During microscope tracking, surgery remains uninterrupted because bringing an IGS instrument, (i.e. a pointer) into the surgical field is no longer necessary.

The OPMI Neuro/NC 4 System has quickly established itself as the system of choice for integration with image guided systems. Major IGS vendors have built support for the OPMI Neuro/NC 4 System into their platforms. Daily, the powerful OPMI Neuro is used with these vendors' systems and works in tandem, seamlessly.

Choosing the OPMI Neuro/NC 4 System for integration with your IGS system comes naturally. Consider the many advanced IGS features that only Carl Zeiss can offer: high accuracy laser guided AutoFocus that overcomes the ambiguity of the depth of field, while reliably pin-pointing the area of interest within a fraction of a millimeter. The integrated Heads-Up display feature is also peerless. Without adding weight, cables or clutter, it conveniently allows the introduction of key anatomical information from the IGS system into the eyepiece. This frees the surgeon from the tiring back and forth glances to the IGS station monitor when determining proximity to key pathology.

Carl Zeiss: your partner in the neurosurgical OR

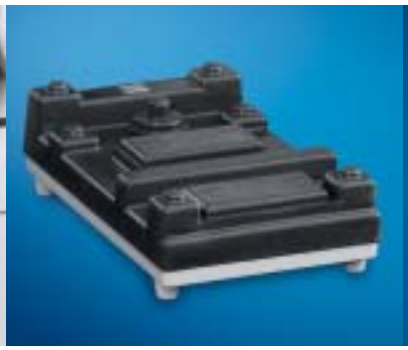

Accessories to improve the way you work

Carl Zeiss strives to provide the complete micro-surgical solution by offering key accessories that can be added to the OPMI Neuro/NC 4 System, to customize the way in which you work.

For example, as an alternative to moving the OPMI Neuro/NC 4 System using the handgrips, a mouthswitch is offered. We've made re-positioning the OPMI as effortless as possible without even lifting your hands from the surgical field.

The optional multi-function foot-control panel further permits ergonomic control of all of the OPMI's functions, (i.e. zoom, focus, and AutoFocus) with one foot. Amazing. Combining these two accessories enables complete hands-free operation of the System – free floating Contraves technology as it was originally designed.

Documentation accessories assist in archiving procedures, whether for presentations, clinical studies or the patient record. A variety of monitors, video recorders and color video printers make optimal use of the stunning imagery produced by the integrated 3CCD MediLive camera system. For still photography, 35 mm cameras can be mounted to the OPMI Neuro via one of the side documentation ports and one of several available camera adapters.

Ensuring the proper sterile environment around your microscope is always essential and Carl Zeiss OPMI Drapes offer the ultimate solution. Designed specifically for the OPMI Neuro/NC 4 System, OPMI Drapes are easily applied and have the perfect fit.

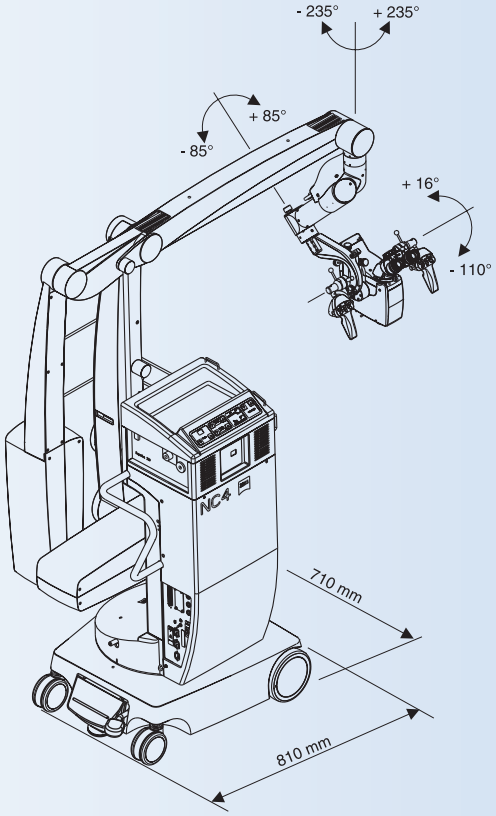
- 235°
+ 235°
+ 85°
- 85°
+ 16°
- 110°
NC4
710 mm
810 mm

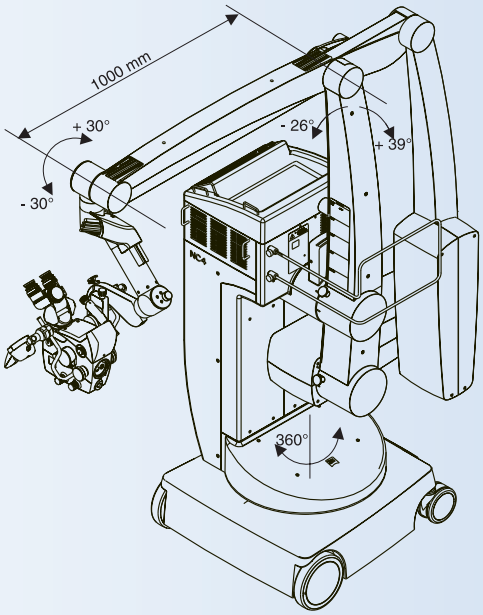
1000 mm
+ 30°
- 30°
- 26°
+ 39°
NC4
360°

Technical Data

OPMI Neuro

Magnification System
Motorized Zoom, 1:6 Ratio.
Adjustable via handgrips or foot control panel.

Focus System
Internal, motorized, continuously variable.
Adjustable via handgrips or foot control panel.
Automatic adjustment of the working distance with laser range-finder AutoFocus.

Working Range
200 - 420 mm

Main Binocular Tube
Inclinable 0 -180° with 10X/21B eyepieces.

NC 4 Floor Stand

Line Voltage
115/230 V ±10%

Line Frequency
50 - 60 Hz

Power Consumption
1000 VA

Line Protection
Automatic Circuit Breaker

Weight
Approx. 285 kg (complete with OPMI)

Compliance
DIN EN ISO 9001
EN 46001
ISO 13485

Superlux 301 Light Source

Main Illumination
300 W Xenon daylight color temperature lamp delivered via fiber-optic light guide.

Flash System
Synchronized camera flash system activated via handgrips, two second repetition interval.

Backup Illumination
12 V 100 W Halogen light source.

The amazing line of neurosurgical microscope systems from Carl Zeiss:

1. OPMI Neuro/NC 4 System
2. OPMI Neuro/NC 4 Ceiling Mount System
3. OPMI Vario/NC 33 System
4. OPMI Vario/S 88 System
5. Prism Loupes

For information, please contact:

30-294-e Printed in Germany CM-TS-V/2002 PTo Printed on environment-friendly paper, bleached without the use of chlorine.
Subject to change in design and scope of delivery amd as a result of ongoing technical development.

Carl Zeiss
Surgical Products Division
73446 Oberkochen,
Germany

Fax: +49 7364/20-48 23
email: surgical@zeiss.de
www.zeiss.de/neuro