FLEX*iS*™

stryker®

Operations Manual

February 2014 P13742 REV N www.stryker.com

FLEX*i*S™

Operations Manual

This manual contains confidential information that shall not be disclosed or duplicated for any reason other than to use and maintain a STRYKER FLEXiS™. This restriction does not limit the right to use information contained in this manual if it is obtained from another source without restriction. The information subject to this restriction is contained in all pages of this manual.

© February 2014 Stryker Communications. All Rights Reserved. Information in this document is subject to change without notice. Stryker and Stryker logo are registered trademarks of Stryker.

FLEXiS™ is a registered trademark of Stryker.

All Rights Reserved

Stryker FLEXiS™ Operations Manual

P13742 REV N

Contents

1. Indications for Use

1.1 Indications

The Stryker FLEXiS is a configurable, ceiling-mounted device used for supporting and positioning equipment and accessories in the operating room and patient care areas where it is necessary to deliver gases, electricity, and data. It is intended to be used for the general patient population, and does not directly involve body parts.

The primary users of FLEXiS are hospital staff including doctors and nurses.

Caution **The boom system can be equipped with devices from other manufacturers. However, the use of non-medical grade devices may invalidate UL listing. For operation, please refer to the operating instructions of the manufacturer.**

1.2 Contraindications

There are no contraindications.

2. General Warnings and Cautions

Please read this manual and follow its instructions carefully. The words WARNING, CAUTION, and Note carry special meanings and should be carefully reviewed:

WARNING **The personal safety of the patient or user may be involved. Disregarding this information could result in injury to the patient.**

Caution **Special service procedures or precautions must be followed to avoid damaging the instrument.**

WARNING **A lightening bolt is intended to warn of the presence of hazardous voltages. Refer all service to authorized personnel.**

Note Special information to make maintenance easier or important information more clear.

To avoid potential serious injury to the user and the patient and/or damage to this device, the user must adhere to the following warnings and cautions.

Note Specific use warnings, cautions, and notes can be found in their applicable sections throughout this manual.

2.1 Warnings

1. Read this manual thoroughly, and be familiar with its contents prior to using this equipment.
2. Be qualified medical personnel, having complete knowledge of the use of this equipment.
3. Test this equipment prior to any procedures.
4. Attempt no repairs or adjustments, unless specifically instructed to do so in this operating manual.
5. Shut off power to the unit before inspecting system components.
6. Use the boom system only as instructed.
7. Do not allow the boom to collide with walls or other equipment.
8. Readjustments, modifications, and/or repairs must be carried out by persons authorized by Stryker, unless otherwise noted in this manual.
9. To avoid the risk of electric shock, this equipment must only be connected to a supply mains with protective earth.
10. To avoid risk of electric shock, do not remove or disable components or remove covers from the product.
11. To avoid risk of electric shock, only connect equipment to the appropriate electrical outlet.
12. This equipment is not sterile or sterilizable, and therefore caution should be taken around the sterile field during procedures.
13. Oxygen gas is a strong oxidizer. Do not use oxygen near ignition sources, as it will allow combustion to proceed rapidly and energetically.
14. DO NOT perform internal repairs or adjustments unless specifically instructed to do so in this manual.

2.2 Cautions

1. Follow the care and cleaning instructions in this manual.
2. For U.S. audience only - Caution: Federal Law (USA) restricts this device to sale by or on the order of a physician.

2.3 Notes

1. Instructions regarding the service and installation of this product may be found in the Service and Installation Manual, which is available only to Stryker-trained employees. For service on this product, please contact your Stryker representative.
2. All electrical services must be routed in accordance with all applicable regulations including but not limited to local building and electrical codes. Circuit breakers are not provided in this unit. FLEXiS System circuits must be connected to correctly rated and protected branch circuits that are protected by double-pole breakers.
3. In the event that it becomes necessary to terminate power to the FLEXiS System, refer to hospital's electrical diagrams to interrupt power at the mains breaker.

3. Product Symbol Definition

The following symbols may be found on the FLEXiS System:

	The book symbol is intended to refer the user to important operating and maintenance (service) instructions in the literature accompanying the product.
	The book symbol is intended to refer the user to important safety operating and maintenance (service) instructions in the literature accompanying the product.
	This symbol is intended to refer the user to important safety operating and maintenance (service) instructions in the literature accompanying the product.
	An exclamation mark within a triangle is intended to alert the user of warnings and cautions.
	A lightning bolt indicates the presence of hazardous voltage. Refer all service to authorized personnel.
	Denotes temperature limits.
	Denotes alternating current.
	Denotes protective earth ground
	Denotes humidity limits.
	Denotes equipotentiality.
	Denotes pressure limits.
	Denotes usage tips and useful information.
kg	Denotes a load limitation.
CE 0197	Denotes compliance to European Community Directive 93-42-EEC.
c UL US LISTED *EDS* *(29AZ)*	Indicates the product is compliant "Medical Electrical Equipment with Respect to Electrical Shock, Fire, and Mechanical Hazard only in accordance with CAN/CSA C22.2 No601.1.
	Denotes the date the equipment was manufactured.

	Denotes the manufacturer of the device.
REF	Denotes product/part number.
SN	Denotes product/serial number.
LOT	Denotes lot or batch number.
EC REP	Denotes European Representative.
!USA Rx ONLY	For U.S. audience only - Caution: Federal Law (USA) restricts this device to sale by or on the order of a physician.
	Denotes quantity.
US	Item available in the US only.
	Denotes Class 1 and Type B Equipment. Class 1 Equipment: equipment in which the protection against electric shock does not rely on Basic Insulation only, but includes an additional safety precaution in such a way that means are provided for the connection of Accessible Conductive Parts to Protective (ground) Conductor in the fixed wiring of the installation in such a way that Accessible Conductive Parts cannot become Live in the event of a failure of the Basic Insulation. According to EN ISO 11197 and EN60601-1, 1990 including amendments 1 and 2. Type B Equipment: equipment providing a particular degree of protection against electric shock, particularly regarding allowable leakage current, and reliability of the protective earth connection (if present).
	In accordance with European Community Directive 2002/96/EC on Waste Electrical and Electronic Equipment, this symbol indicates that the product must not be disposed of as unsorted municipal waste but should be collected separately. **Note:** The device does not contain any hazardous materials. Legal regulations may include specifications regarding the disposal of this product. We request that you contact Stryker when you plan to withdraw this device from service for discard.
M 3 min | ; 30 min	This symbol represents the motor duty cycle, or the amount of time an articulating service head can be operated (3 minutes) and then must rest (30 minutes) before being operated again.
	Denotes tipping hazard.
	Indicates double-stacking is prohibited.

	Indicates a forklift should not be used with packaging or equipment.
	Indicates contents are fragile.
INPUT	Device input.
IP2X	Rating for Protection against harmful ingress of water or particulate matter.
MAX LOAD	Indicates there is a maximum allowable load capacity for labeled equipment.
SHELF	Shelf
PO	The PO symbol is the unique identifier for the FLEXiS Boom System that is generated for each order. This number will allow Stryker to determine the configuration of the FLEXiS Boom System.
Accessory	Accessory
DROP TUBE	Drop Tube
PENDANT	Pendant
NIGHT LIGHT	Night Light
AUTO	Automatic
	On
	Off
	Designates emergency stop.
HIGH SEISMIC MAX LOAD	Indicates there is a maximum allowable load capacity for labeled equipment in high seismic zone.

3.1 EMC Precautions

This device is considered medical electrical equipment and requires special precautions regarding EMC. This device needs to be installed and put into service according to the EMC information provided in this manual.

Portable and mobile RF communications equipment can affect this device's performance and must be used in accordance with the following information.

3.1.1 Required Equipment

This device must be used with the provided cable kits.

WARNING **Using accessories or cables other than those specified may result in increased emissions or decreased immunity of the equipment or system. The Stryker-supplied equipment conforms to IEC 60601-1-2 requirements.**

WARNING **The equipment or system should not be used adjacent to or stacked with other equipment. If adjacent or stacked use is necessary, the equipment or system should be observed to verify normal operation in the configuration in which it will be used.**

4. Understanding Load Capacities

Each piece of equipment on the FLEXiS System is rated with a maximum load capacity that should never be exceeded to prevent damaging the equipment. The following sections explain the load limits for each item available through Stryker. For non-Stryker items, please refer to the manufacturer's instructions.

4.1 FLEXiS System

Each set of boom arms is rated to carry a maximum allowable weight, exceeding this weight could cause damage to the boom and/or equipment. Depending on the type of boom arm, the maximum load capacity will vary. A load limit label is located on two opposite sides of the drop tube, directly above the FLEXiS, and is boom-specific. The maximum allowable weight claimed on the load label takes into account any shelves and accessories that were shipped with the boom initially; therefore, the number that appears on the label is the remaining allowable load limit for the specific boom and should not be exceeded when adding further shelves, accessories, or equipment.

WARNING **It is imperative to take into account the weight of shelves and accessories when calculating the total load on the boom. Do not exceed the total maximum load capacity for the FLEXiS System.**

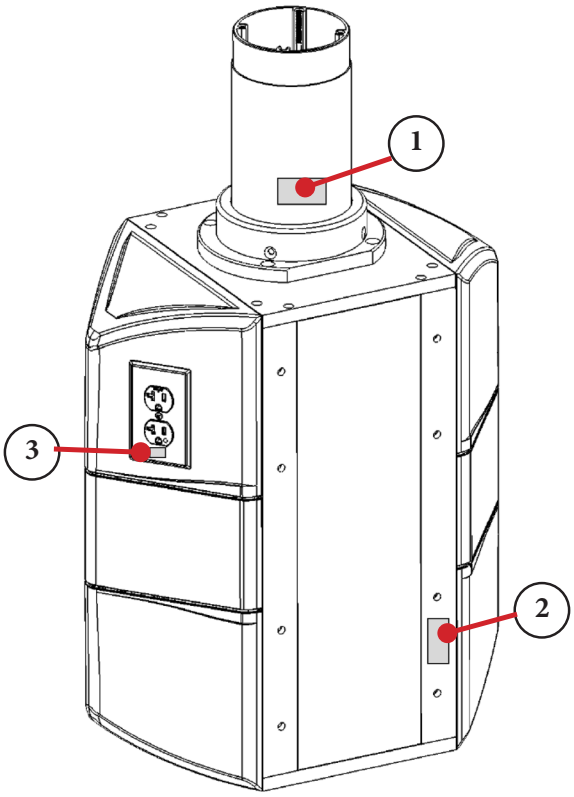

Figure 4.1 - Label Locations

1	Max Load Label
2	Product Label
3	Electrical Circuit Rating Label

Other important labels on FLEXiS System include the product label, which can be found near the front panel, and the electrical circuit ratings, which can be found on the outlets themselves.

4.2 Shelves and Drawers

Shelves are rated to carry a maximum load capacity of 75 lbs. The load on each shelf is the combination of the load on the accessory rails and the equipment on the shelf. For example if you hang 20 lbs of accessories on the rails you may only put 55 lbs of equipment on the shelf.

If you add a drawer that weighs 26 lbs and put 22 lbs of equipment in the drawer you may only put 27 lbs of equipment on the shelf.

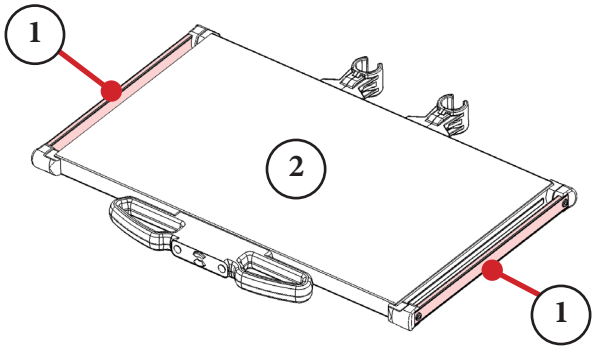

Figure 4.2 - Shelf with Accessory Rails

1	Accessory Rail
2	Shelf

WARNING **Do not exceed the load capacity for shelves, accessory rails, keyboard trays, or drawers when adding equipment and accessories.**

WARNING **Do not exceed the total boom load capacity when adding shelves and/or accessories. While a shelf may hold up to 75 lbs, the additional weight may exceed the total boom capacity.**

4.3 Large Screen Mount

The LS Mount is rated to carry a maximum load capacity of 165 lbs.

WARNING **Do not exceed the load capacity for the LS Mount when installing a large screen monitor.**

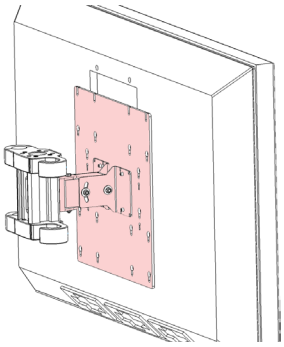

WARNING **Do not exceed the total boom load capacity when adding a large screen monitor and its mount. While a LS mount may hold up to 165 lbs, the additional weight may exceed the total boom capacity.**

Installation information for the LS Mount can be found in the GCX Mount Kit Installation Guide (P26335).

4.4 Accessory Rails

Each accessory rail attached to the service head, shelves, and MFR has a maximum load capacity of 37 lbs.

WARNING **Do not exceed the load capacity for the accessory rails when adding equipment and accessories.**

WARNING **Do not exceed the total boom load capacity when adding accessory rails and/or accessories.**

4.5 Accessories and Other Components

Below are approximate weights for accessories manufactured for and by Stryker for FLEXiS. Use these calculations when determining the additional weight these accessories and other components add toward the maximum allowable load limit for the boom arm.

Accessory	Approximate Weight	Max Load Capacity
Small Shelf	15 lbs (6.8 kg)	75 lbs (35 kg)
Large Shelf	20 lbs (9 kg)	75 lbs (35 kgs)
Adjustable Shelf	20 lbs (9 kg)	75 lbs (35 kgs)
GCX Arm Mount	5 lbs (2.3 kg)	60 lbs (27.2 kg)
LS Mount*	19 lbs (9 kg)	165 lbs (75 kg)
SHAPE Arm Mount	15 lbs (6.8 kg)	25 lbs (11.4 kg)
IV Pole Single Arm*	5 lbs (2.3 kg)	67 lbs (30 kg)
IV Pole Double Arm*	10 lbs (4.5 kg)	88 lbs (40 kg)
IV Pole Quad Arm*	20 lbs (9 kg)	176 lbs (80 kg)
Drawer	26 lbs (11.9 kg)	22 lbs (10 kg)
Dual Drawer	45 lbs (20.4 kg)	22 lbs (10 kg)
Keyboard Tray	3 lbs (1.4 kg)	2.5 lbs (1.1 kg)

* This accessory not evaluated by UL.

Note For weights of accessories not listed in the chart above, contact the original manufacturer.

4.6 Electric Current

Each electrical circuit is labeled with a maximum current rating.

WARNING **To prevent electric shock and damage to the outlet and boom, do not exceed the electrical circuit rating.**

5. FLEXiS Components

The FLEXiS System is available in articulating and non-articulating configurations, and with various load capacities. The booms can be configured in pairs (a tandem configuration) or with other equipment, such as flat panel monitor suspensions and surgical lights.

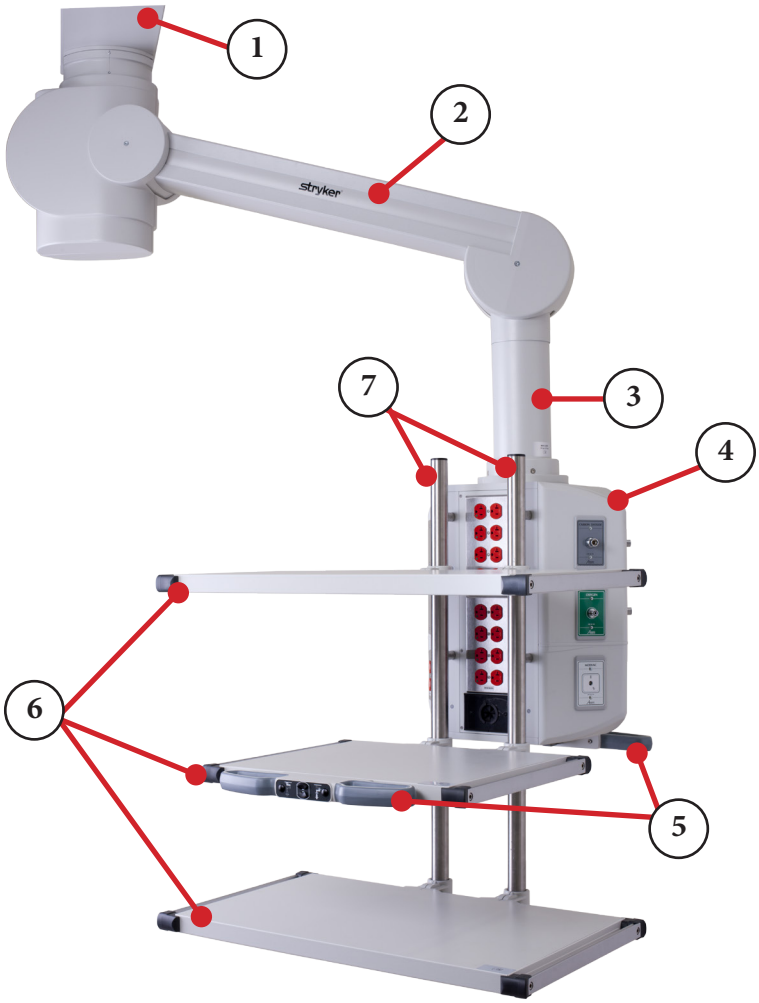

Figure 5.1 - FLEXiS System

1	Extension Arm
2	Motor Arm (Articulating Boom only)
3	Drop Tube
4	FLEXiS Service Head
5	Navigation Handles
6	Equipment Shelves
7	Multi-Function Rack

The FLEXiS System may include some or all of the components listed in the following sections.

5.1 Cable Kits

Booms are equipped with various cables connected to the FLEXiS System. Extra cables may be present inside the boom. Contact your Stryker representative if additional cables are required.

Note If included, USB cables are only 15’ (4.572m) in length. If the USB cable must span a distance greater than 15’ (4.572m), a USB repeater/extender must be used.

5.2 Ceiling Cover

The ceiling cover conceals the support structure, as well as the gas and electrical connections to the boom system. The ceiling cover should only be removed by trained service personnel.

5.3 Extension Arm

The extension arm can be rotated up to 330˚. To avoid interference with the ceiling, walls, or other equipment, the rotating range of the extension arm can be limited with mechanical stops during installation.

5.4 Motor Arm (Articulating Boom Only)

The motor arm can be rotated up to 330˚, but may be limited to prevent interference with ceiling, walls, or other equipment. The motor arm can be moved vertically 17˚ up and 22˚ down.

5.5 Drop tube

The length of the drop tube compensates for different room heights to ensure that the FLEXiS System is at a suitable working height.

5.6 FLEXiS System

The FLEXiS System contains shelves, equipment supports, power outlets, gas outlets, and data connections and is highly customizable. It can be rotated separately from the arms up to 340˚. Medical devices can be placed onto the shelves (optional).

WARNING **Oxygen gas is an oxidant. Fire and explosion hazards exist when concentrated sources of oxygen are brought into close proximity of open sparks, flames, or heat. Do not use oxygen near these sources of ignition as it may result in rapid combustion.**

Warning **Improperly grounded devices connected to the boom electrical outlets may cause electric shock to the user or patient.**

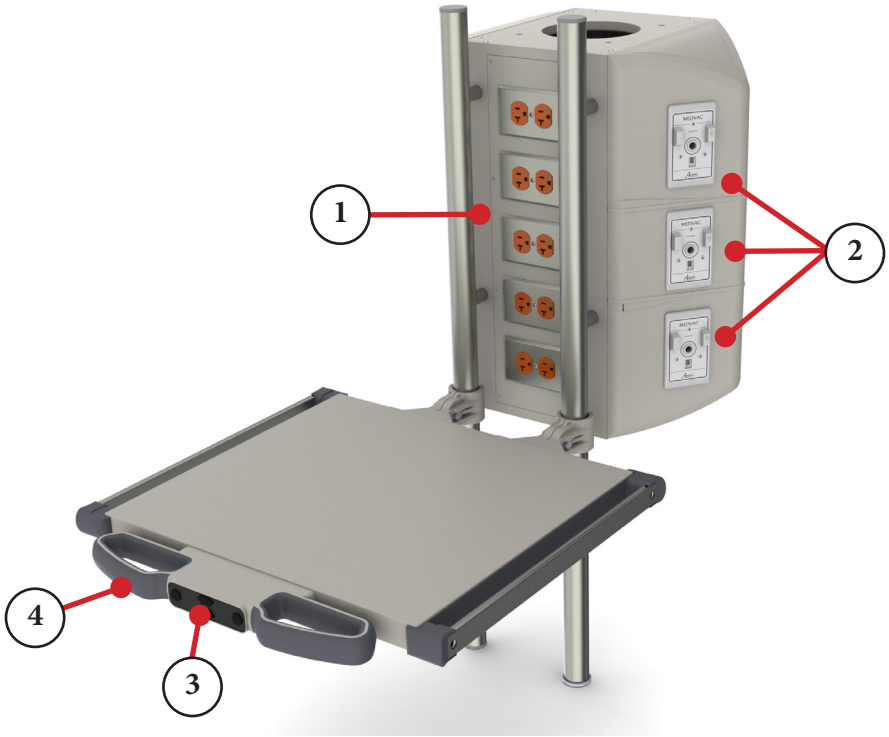

Figure 6.1 - FLEXiS System with Shelf

1	Front Plate
2	Side Modules (Configurable)
3	Brake and Articulation Controls
4	Handle

6.1 Electrical Outlets

Electrical outlet types will vary depending upon region standards. When using an electrical outlet, ensure that there is a firm connection between the plug and the outlet. Some outlets may require that a power switch be turned on before use. If necessary, push in a plug and turn it clockwise to lock the connection into place.

WARNING **Use care when cleaning around electrical outlets and ensure that no fluid enters the socket to prevent electric shock.**

WARNING **Check outlet for damage before use.**

Caution **Always ensure that plugs are firmly connected to the socket during use to prevent damage to the equipment.**

Caution **Always grasp the plug, as opposed to the cord, when unplugging equipment to prevent damage to the wires within the cord.**

Caution **When connecting or disconnecting equipment to or from the outlets on the FLEXiS System, use one hand to stabilize the boom, and the other to connect or disconnect the components.**

Note In the event that it becomes necessary to terminate power to the FLEXiS System, refer to hospital's electrical diagrams to discontinue power at the mains breaker.

The following electrical outlet types may be configured on the system:

Domestic US

- NEMA 5-15R
- NEMA 6-15R
- NEMA 5-20R
- NEMA 6-20R
- NEMA 5-30R
- NEMA 6-30R
- NEMA L5-15R
- NEMA L6-15R
- NEMA L5-20R
- NEMA L6-20R
- NEMA L5-30R
- NEMA L6-30R

International (Outside the U.S.)

- AS/NZS 3122
- BS 1363
- BS 546
- CEE 7 SHUKO
- CEE 7
- AFSNIT 107-2-D1
- CEI 23-16/VII
- GB2099-1 & GB1002-1
- NBR 14136

Note For more detailed instructions on use and information on maintenance schedules, contact the outlet Manufacturer.

Any of the outlets listed above may be provided by the following manufacturers and are suitable for a 10A branch circuit:

Manufacturer	Manufacturer Part Number	Country/Type	Rating	Type
Clipsal	ML2025V-RD (red) ML2025V-BL (blue)	Australia/New Zealand Socket Outlet	250VAC / 10A	Dual outlet with switch and light
Clipsal	ML2025VD-RD (red) ML2025VD-BL (blue)	Australia/New Zealand Socket Outlet	250VAC / 10A	Duplex with switch
Legrand	074167 (white)	Australia/New Zealand Socket Outlet	250VAC / 10A	Single socket outlet

6.2 Gas Outlets

WARNING **Always ensure hoses are tightly connected to the outlet before use to prevent leakage.**

The FLEXiS System can be configured with any of the following types of gases:

- Oxygen
- Nitrogen
- Nitrous Oxide
- Medical Air/MA4
- CO_2
- Vacuum
- WAGD/AGSS
- He/O_2
- O_2/He
- Instrument Air/SA7/ Surgical Tool Air/Air 800/Air Motor

Note Not all gas types listed above are available in all regions.

Depending on the FLEXiS configuration and region standards, the gas types listed above may be supplied through any of the following outlet types:

- DISS
- ENV 737-6:2003
- CHEMTRON
- PURITAN-BENNETT
- OXEQUIP
- OHMEDA (MADAES)
- SIS (AS2896)
- JIS T 7101
- BS 5682:1998
- BSI 6834:1987
- DIN 13260-2
- SS 875 24 30 (AGA)
- ISO 9170-1
- ISO 9170-2
- UNI 9507
- NF S 90-116

Instructions on using the outlet types follow.

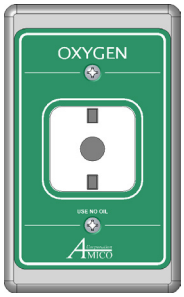

Puritan-Bennett US	Oxequip US	Ohmeda-Medaes US
Insertion: To insert a gas hose into the Puritan-Bennett outlet, press it firmly into the connection. **Removal:** To release the connection, press the hose and connection plate in and then pull out.	**Insertion:** To insert a gas hose into the Oxequip outlet, press it firmly into the connection and turn to the right. **Removal:** To release the connection, turn the connector to the left and pull out.	**Insertion:** To insert a gas hose into an Ohmeda-Medaes outlet, press it in firmly. **Removal:** To remove the connection, turn the outer ring on the connector and pull back.

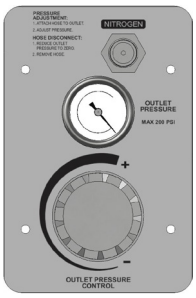

DISS US	Chemtron US	Regulator US
Insertion: To install a gas hose onto the DISS outlet, screw the hose on tightly, turning to the right. **Removal:** To remove the hose, unscrew the hose to the left until it comes free from the connection.	**Insertion:** To insert a gas hose into the Chemtron outlet, press it firmly into the connection. **Removal:** To release the connection, press down on the white keys to either side of the hose while pulling the hose free from the connection.	**Insertion and Use:** To install a gas hose onto the regulator, screw the hose on tightly, turning to the right. Adjust the pressure appropriately for the equipment being used. **Removal:** Reduce the outlet pressure to zero, and then remove the hose.

AGSS (Canada Only)
Insertion: Place passive AGSS hose over AGSS fitting. Press firmly onto the fitting. **Removal:** To release the connection, pull hose away from AGSS plate. **WARNING** **Do not remove fitting adapter on AGSS outlet.**

Note Please contact your Stryker representative for repair or replacement of gas hoses.

Note For more detailed instructions on use and information on maintenance schedules for outlets, contact the outlet Manufacturer.

6.2.1 Airflow Meters

The FLEXiS System can be configured with airflow meters. Please refer to the manufacturer's instructions for connection and use.

Integrated Oxygen/Medical Airflow Meters US

6.2.2 Data Connections

Caution **When disconnecting data connections, be sure to grasp the connector itself, rather than the cable, to prevent damage to the cables.**

Caution **Use care when making data connections to ensure that the correct connections are being made. Plugging in a connection incorrectly could damage data pins.**

The FLEXiS System can be configured with any of the following types of data connections:

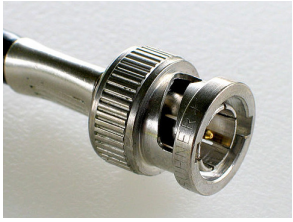

DB9	BNC	RJ45
Insertion: To insert a DB9 connector, press it firmly into the DB9 connection. Tighten both screws on the connector to ensure a tight connection. **Removal:** To remove the DB9, unscrew both screws, grasp the connector firmly, and pull.	**Insertion:** To insert a BNC connector, press it firmly into the BNC connection and then twist to lock it into place. **Removal:** To remove the BNC connector, twist to unlock it, and then pull.	**Insertion:** To insert an RJ45 connector, press it firmly into the RJ45 connection until you hear an audible “click”. **Removal:** To remove the RJ45 connector, press the tab at the top of the connector to unlock it, and pull while keeping the tab depressed.



HD15	4 PIN DIN	DVI-I
Insertion: To insert an HD15 connector, press it firmly into the HD15 connection. Tighten both screws on the connector to ensure a tight connection. **Removal:** To remove the HD15, unscrew both screws, grasp the connector firmly, and pull.	**Insertion:** To insert a 4 PIN DIN connector, press it firmly into the 4 PIN DIN connection. **Removal:** To remove the 4 PIN DIN, grasp the connector firmly and pull.	**Insertion:** To insert a DVI-I connector, press it firmly into the DVI-I connection. Tighten both screws on the connector to ensure a tight connection. **Removal:** To remove the DVI-I, unscrew both screws, grasp the connector firmly, and pull.


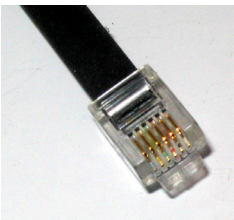
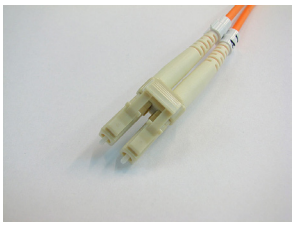

USB (A or B)	RJ11	LC Fiber
Insertion: To insert a USB connector, press it firmly into the USB connection. **Removal:** To remove the USB, grasp the connector firmly and pull.	**Insertion:** To insert an RJ11 connector, press it firmly into the RJ11 connection until you hear an audible “click”. **Removal:** To remove the RJ11 connector, press the tab at the top of the connector to unlock it, and pull while keeping the tab depressed.	**Insertion:** To insert an LC fiber connector, press it firmly into the fiber connection. **Removal:** To remove the fiber connector, grasp the connector, depress the tab, and pull.

Note For more detailed instructions and information on maintenance schedules, contact the cable Manufacturer.

6.3 Customer Component Installation

6.3.1 Nurse Call, Code Blue, and Data

The FLEXiS System can be configured with junction boxes that accommodate user-installed equipment, such as Nurse Call and Code Blue buttons, as well as data outlets.

To install these components:

1. Remove the designated cover plate from the FLEXiS System to expose the metal back-box and conduit with pull-string.

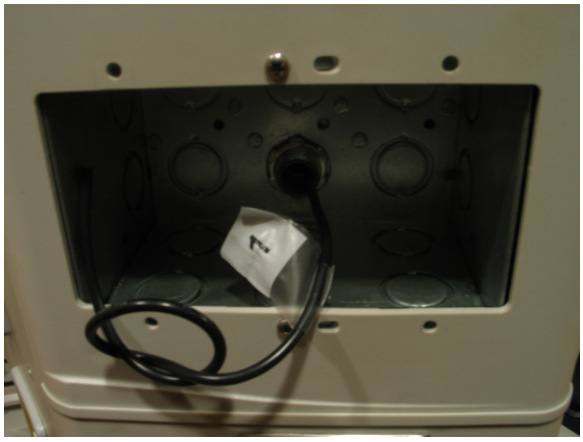

Figure 6.2 - Back Box with Conduit

2. Use the pull-string to pull the cables down from the ceiling to the outlet and attach to the appropriate conduit.
3. Connect the Nurse Call/Code Blue/Data cable to the FLEXiS System cable.
4. Press equipment securely into the back-box.
5. Secure fasteners as necessary.
6. Install all covers.

Caution **Use only designated outlets to mount equipment and designated conduits for cables. Never open the boom system to uninstall equipment.**

Note User is responsible for safe installation of equipment.

6.3.2 Pulling Customer-Supplied Cabling through Boom

A FLEXiS boom (OSC600 or MMP200) can be configured to contain a conduit routed internal to the boom for ease of pulling customer-supplied cables through the boom. The largest cable bundle that can be consistently pulled through this conduit is 5 cm^2 in cross sectional area.

Note The conduit has been tested to protect a similar cable set and withstand the lifetime use of a boom. The minimum bend radius of the conduit is 91 mm. The lifetime use of a boom includes:

- 5 cycles at 90° rotation (for cleaning and repositioning between cases)/day occupied * 5 days occupied/week *52 weeks/year = 1300
- 1 cycle of 180° rotation (for daily cleaning)/day occupied * 5 days occupied/week *52 weeks/year = 260
- 1 cycle of 330° rotation (for inspection)/week * 52 weeks/year = 52 Total = 1612 cycles/year * 7 years = 11284 cycles or approximately 11,500.

The customer must ensure their cables meet the minimum bend radius and reliability requirements to withstand the lifetime use of a boom.

Note It is strongly advised to terminate connectors after the cable is pulled through the conduit when using large connectors. When this is not possible, the large connectors should be folded back and buried within the cable bundle to reduce resistance when pulling.

7. Bundle the cables to be pulled through the boom into a single cable bundle, so they can all pulled through at the same time (Figure 6.3).

Figure 6.3 - Bundled Cables

Caution **Ensure cable connectors are protected by the tape/wrap and the cable bundle itself. Any exposed connectors may be damaged when the cables are being pulled.**

Note Connector is folded back towards other direction and should be buried into the bundle when pulling through system.

8. Stagger the ends of connectors as shown in Figure 6.4 prior to taping and attaching to the pull cord. This makes the cables less bulky and makes pulling the cables easier.

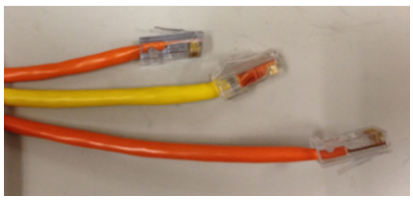

Figure 6.4 - Staggered Connector Ends

9. Extend the boom arms into the position shown in Figure 6.5, with both arms fully extended for the easiest cable pull.

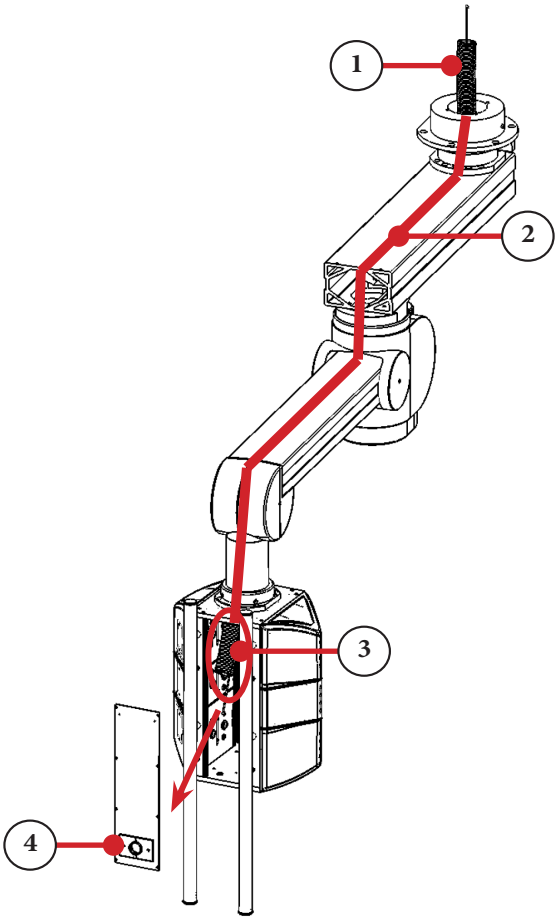

Figure 6.5 - Cable Pull Route

1	Conduit (Top Bearing)
2	Cable Path
3	Conduit (Service Head)
4	Data Passthrough

10. Locate the ends of the conduit with pullstring as highlighted in the figure (Items 1 and 3). One end will be routed out of the top bearing above the ceiling (Item 1). The other end will protrude into the service head (Item 3) and can be found behind the front/back plate.
11. To remove a front/back plate, loosen the eight attachment screws and pull off the plate.

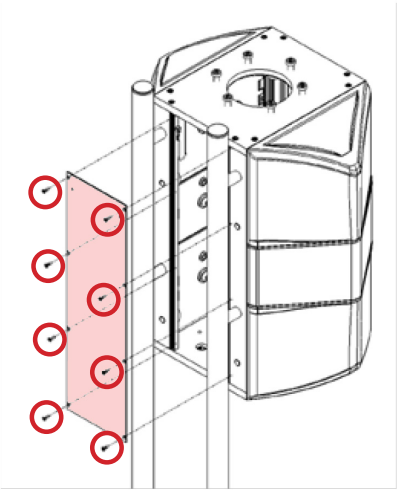

Figure 6.6 - Front/Back Plate

12. Tie the cable bundle into the pullstring at the starting point of the cable pull. The cable should be pulled in a direction to minimize the length of cable being pulled through the boom.

Figure 6.7 - Pullstring

13. The pullstring is located in the black conduit. Tape the cable bundle to this pull string on one end.
14. Two people should perform the cable pull: one feeding the cable, and one pulling the cable from the opposite end. Feed and pull simultaneously to reduce resistance during the cable pull.
15. Route the cables through the data passthrough.
16. Re-attach the front/back plate on the service head by re-tightening the eight attachment screws.
17. Attach the data passthrough cover on front/back plate.

7.1 Multi-Function Rack (MFR)

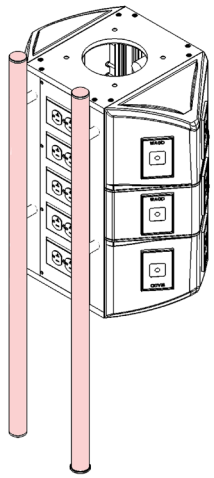

Figure 7.1 - MFRs

The Multi-Function Rack (MFR) is used to mount shelves and other large accessories. For installation and removal of accessories from the MFR, refer to the individual accessory sections.

7.2 Accessory Rails

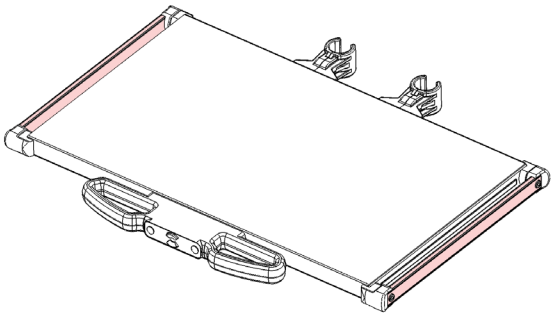

Figure 7.2 - Shelf Accessory Rails

Accessory rails are used to attach equipment such as suction canisters and storage baskets. Accessory rails are provided on equipment shelves. If there are no shelves, the rails may be attached to the MFR.

7.2.1 Installing an Extended Fairfield Accessory Rail with Bottom Bracket

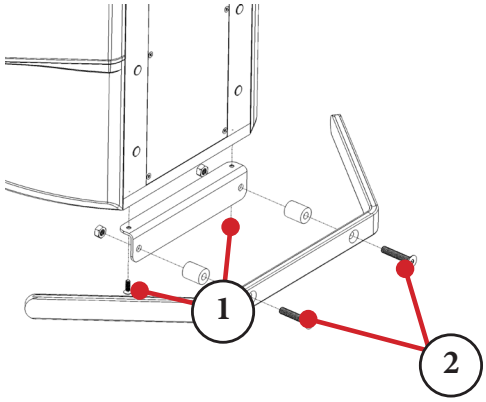

Figure 7.3 - Bracket Installation

1. Install the bracket to the bottom edge of the chassis in the desired location using the two M5 mounting screws. (Item 1, Figure 7.3)
2. Attach the rail to the bracket using the M8 screws, spacers and nuts. (Item 2, Figure 7.3).

7.2.2 Installing a Fairfield Accessory Rail

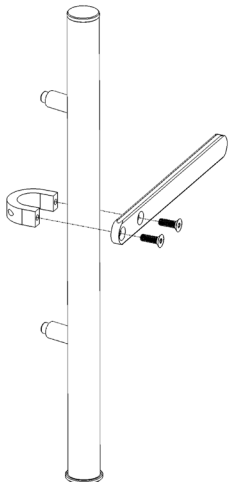

Figure 7.4 - Fairfield Installation

1. Position the rail along the MFR aligning the holes with the clamp.
2. Loosely install the two M8 screws before positioning the rail in the desired location. Evenly tighten the screws.

7.2.3 Installing a Dual Fairfield Accessory Rail

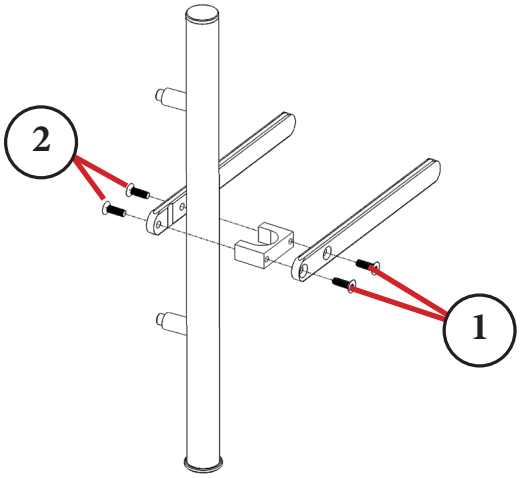

Figure 7.5 - Dual Fairfield Installation

1. Attach one of the rails to the flat side of the clamp with two M8 bolts (Item 1, Figure 7.5)
2. Position the second rail along the MFR aligning the holes with the open end of the clamp. (Item 2, Figure 7.5)
3. Loosely install the two M8 screws before positioning the rail in the desired location. Evenly tighten the screws.

7.2.4 Installing an Extended Fairfield Accessory Rail

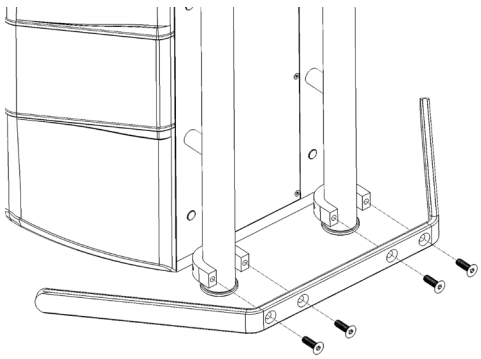

Figure 7.6 - Extended Fairfield Installation

1. Align the extended rail on both MFR rails with the two clamps.
2. Loosely install two M8 screws in each clamp before positioning the rail in the desired location. Evenly tighten the screws.

7.3 Cable Management System

Remove the cable management system components from the packaging. The package should include the parts seen in Figure 7.3.

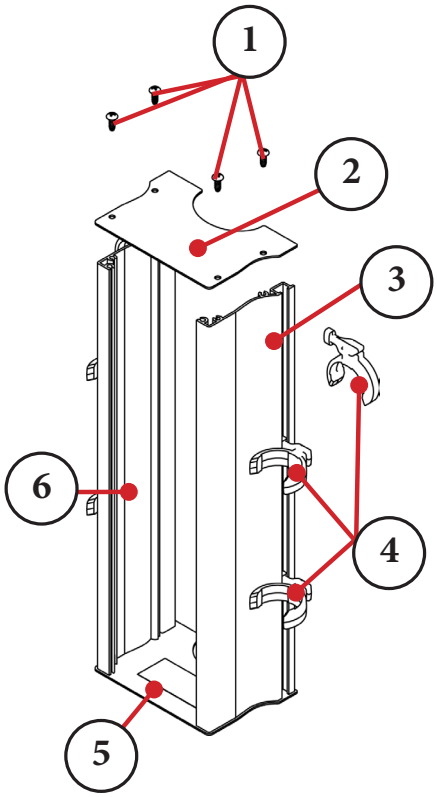

Figure 7.7 - Cable Manager Assembly

1	Screws
2	Top Plate
3	Right Side Panel
4	Clips
5	Bottom Plate
6	Left Side Panel

1. Remove the cable management system components from the packaging. The package should include the parts seen in Cable Manager Assembly Figure.
2. Assemble the top plate (Item 2) to both side panels (Items 1 and 3) of the cable manager with four screws. The cap is designated with the cutout facing the FLEXiS to allow cables to pass through.

Note Do not use a power screwdriver to attach caps to side panels.

3. Slide the assembly between the MFR tubes, taking care to enclose cables between the panels as appropriate. Slide either from the bottom or from the top.

> **Note** Although the cable manager can be installed with shelves, cables, and hoses present, it may be necessary to remove connectors to allow installation.

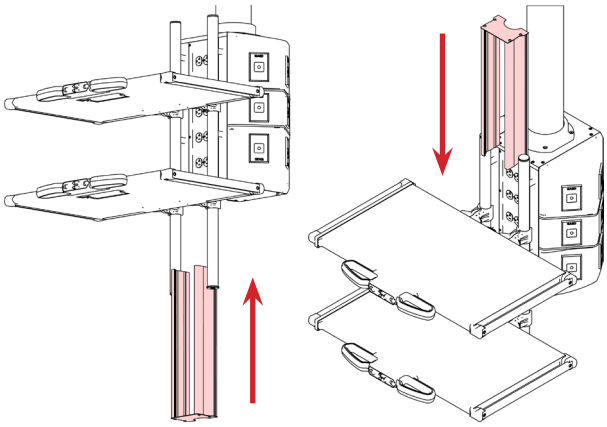

Figure 7.8 - Assembly Installation

4. Attach the remaining cap to side panels with four screws.
5. Center the cable manager vertically on the service head and secure it to the MFR using the clips.
   a. Slide the notch of the clip into the groove of the respective side plate.

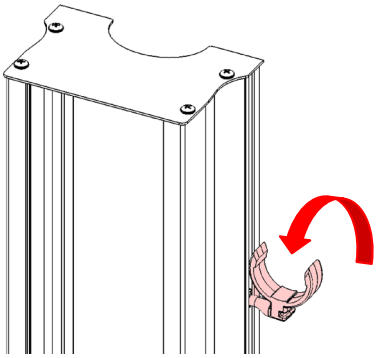

Figure 7.9- Clip Installation

   b. Rotate the clip to engage the MFR and the groove. If necessary, use a flat head screwdriver to help rotate the clip.
   c. Install at least two clips on each side of the Cable Manager. Additional clips are provided if more support is desired.

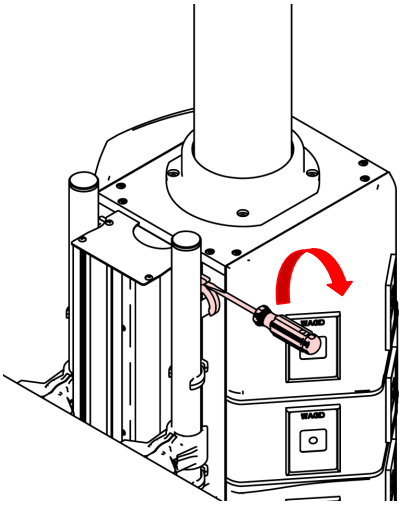

Figure 7.10 - Clip Installation Using Screwdriver

7.4 Shelf with Keyboard Tray

To install a keyboard tray to a shelf:

1. Align the screw holes on top of the keyboard tray housing with the holes on the bottom of the respective shelf.
2. Secure the tray using the four screws included with the keyboard tray.

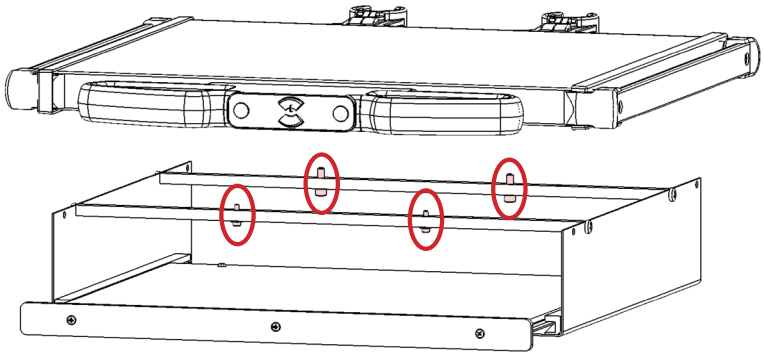

Figure 7.11 - Keyboard Tray Installation

3. Tighten all screws fully.

WARNING **Be sure to fully tighten all screws to prevent the keyboard tray from falling off.**

7.5 Shelf with Drawer

To install a drawer to a shelf:

1. Slide the drawer out in order to gain access to the installation screw holes.
2. Align the screw holes on top of the drawer housing with the holes on the bottom of the respective shelf.
3. Push the screws through the top of the drawer housing.
4. Place spacers over the screws to separate the drawer housing and shelf.
5. Secure the drawer using the four screws included with the drawer.

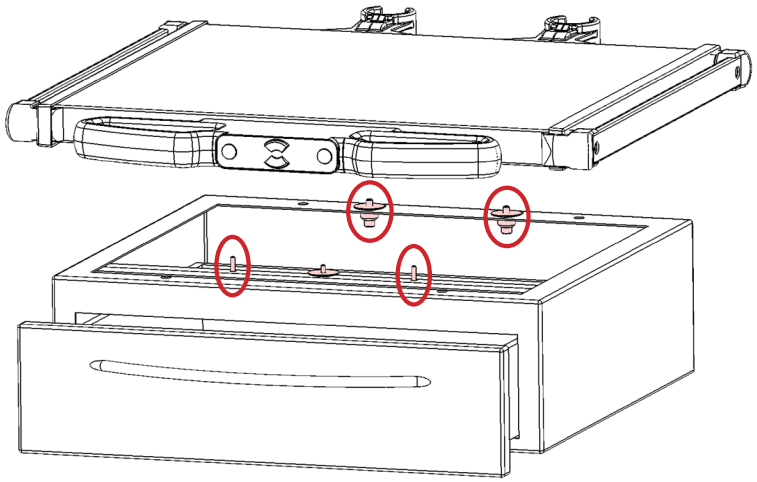

Figure 7.12 - Drawer Installation

6. Tighten all screws fully.

WARNING **Be sure to fully tighten all screws to prevent the drawer from falling off.**

7.6 Night Light

The night light is located on the bottom of the FLEXiS System and provides low level lighting. The night light PCB assembly contains a light sensor so that it turns on automatically when the light level in the room drops.

7.6.1 Replacing the Night Light

To replace the night light:

1. Remove the screws from the night light cover plate in the service head side module to gain access to the Night Light PCB assembly. (Night light PCB assembly will still have cables connected.)

Figure 7.13

2. Disconnect the red and black wires from the Night Light PCB assembly terminal block by depressing the white tabs on top of the orange terminal block and pulling the wires free. Leave wires hanging outside of the service head corner module.

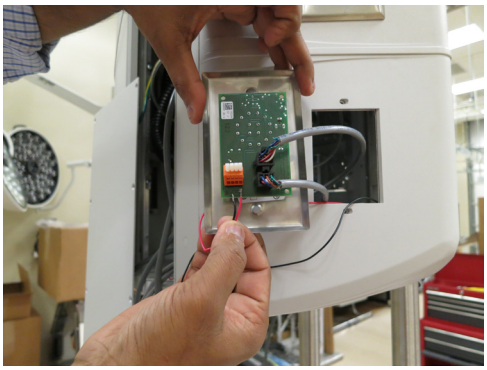

Figure 7.14

3. Disconnect the EP Box cable (Item 2) and 2nd handle cable (Item 3)(if necessary) from the 6-pin connectors on PCB Board of the night light assembly.
4. Set PCB and cover plate assembly aside (Item 1).
5. If PCB and cover plate assembly need to be replaced:
   a. Change out the PCB assemblies.
   b. Reconnect the red, black, EP box, and 2nd handle cables.
   c. Reinstall the PCB assembly to the corner module of the service head.
   d. If the light and wires need to be replaced, continue to the next step.

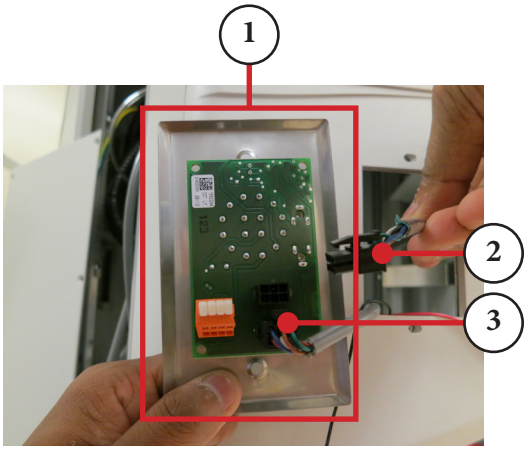

Figure 7.15

6. Open the Flexis Service Rear Plate by loosening the captivated screws.

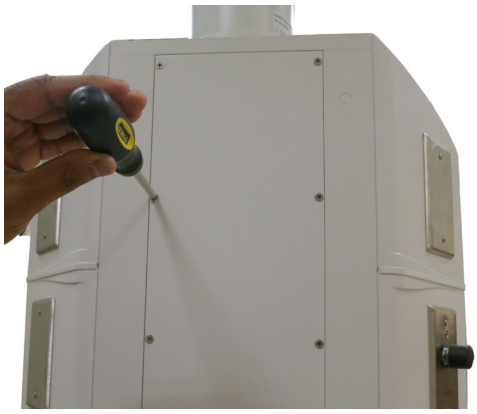

Figure 7.16

7. Observe the routing of the black and red wires inside the service head from the night light to the side module.

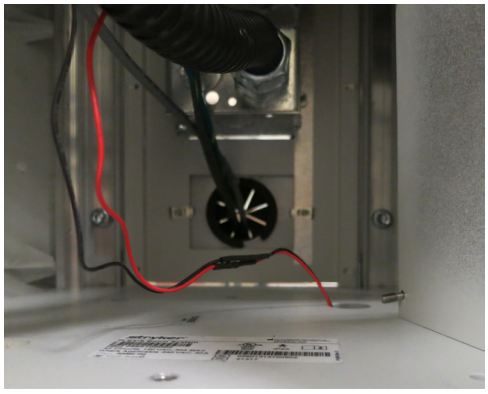

Figure 7.17

8. Carefully peel the night light from underneath the service head with a small flathead screwdriver.

Figure 7.18

9. Clean the bottom plate on the outside of the service head with an approved cleaning method per Section 11.
10. Route the red and black wires of a new night light through the same hole in the bottom plate of the service head from underneath the service head.

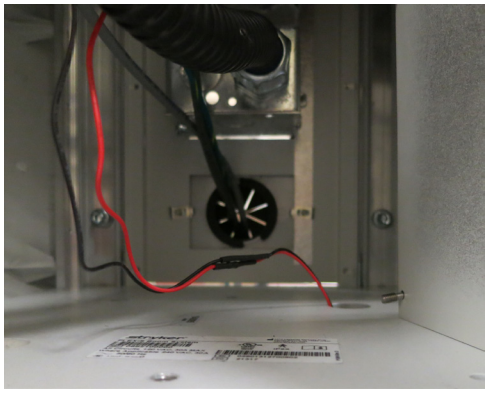

Figure 7.19

11. Peel the sticker off the back of the new night light and affix it to the underside of the service head in the same location as the previous light.

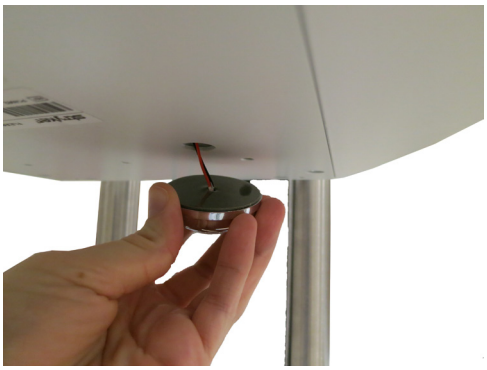

Figure 7.20

12. Route the red and black wires from the night light through the grounding bracket inside the service head.

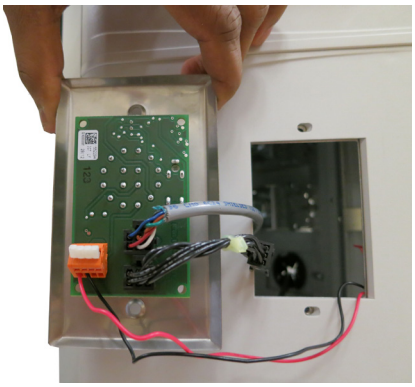

Figure 7.21

13. Reconnect the red (+) and black (-) wires to the PCB assembly terminal block.
14. Reconnect the EP box cable and 2nd handle cable (if necessary).
15. Test the light for functionality.
    a Turn the knob to “On” and ensure the light comes on.
    b. Turn the know to “Off” and ensure the light turns off.
    c. Turn the knob to “Auto”, cover the sensor on the PCB assembly, and ensure the light turns on.

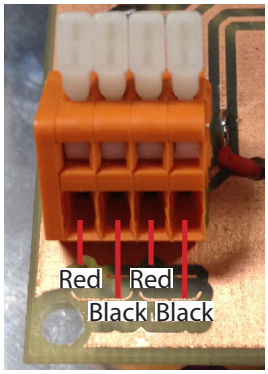

Figure 7.22

    d. Uncover the sensor on the PCB assembly and ensure the light turns off.

> **Note** If the light does not come on, check the position of the red and black cables, and EP box cable connection.

16. Reinstall the night light cover plate
17. Reinstall the Flexis Service Rear Plate.

7.7 Emergency Stop

The emergency, or E-Stop feature is only available on certain models of FLEXiS. It is a large red button that cuts power to an articulating boom’s motor.

To initiate the E-Stop, press the button.

Note Pressing the E-Stop button does not cut power to electrical outlets on the FLEXiS system, but only to the boom motor.

7.8 GCX/SHAPE Adapter

The GCX/SHAPE adapter is used to mount accessories on the FLEXiS System.

WARNING **Do not exceed the following weight limits for GCX accessories and equipment:**

SHAPE Arm	25 lbs (11.4 kg)
GCX Large Screen Mount	165 lbs (75 kgs)

There are four types of accessory adapters available for the FLEXiS System:

1. Dual SHAPE Arms (0682400254)
2. GCX Arm and SHAPE Arm (0682400256)
3. GCX-only Arm (0682400255)
4. SHAPE Arm Only (0682400253)

Depending on the type, some GCX/SHAPE adapters can be installed either on top of the MFR or anywhere along the MFR.

7.8.1 GCX Accessories

Accessories are available that attach to the GCX rail and can include any of the items listed below. Instructions on using these accessories is included in their individual packaging.

GCX Pivot Arm

The GCX Pivot Arms are designed to hold Stryker flat panel monitors. They pivot for lateral adjustment and swivel/tilt at the monitor.

GCX Variable Height Arm

GCX Variable Height Arms work much the same as the Pivot arm with the exception of the gas spring-assisted height adjustment.

7.8.2 Installing a Large Screen Monitor onto the LS Mount VESA Plate

The LS Mount will be pre-installed on the FLEXiS system by Stryker. The LS Mount VESA plate was designed to be VESA FDMI compatible with the following mounting patterns for large screens:

- M8: 100 x 300 mm
- 200 x 200 mm
- 200 x 400 mm
- 400 x 400 mm

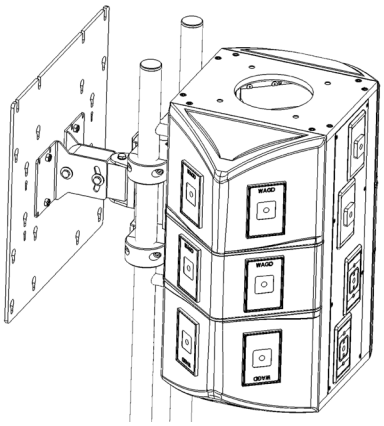

7.8.3 Adjusting the Tilt of the Large Screen Monitor Mount

Caution **The tilt bolt and nut are torqued initially by Stryker to ensure the weight of a monitor will be supported. If the tilt is adjusted, ensure the bolt and nut are fully re-tightened to support the weight of the monitor.**

Note If the monitor is installed on the LS Mount, support the weight of the monitor before adjusting the tilt or the monitor could be damaged.

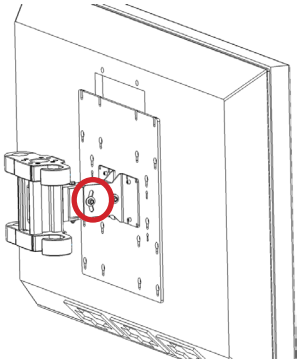

1. Loosen the tilt adjustment bolt and nut as shown.
2. Adjust the tilt to the desired level.
3. Fully tighten the tilt bolt and nut.

7.9 IV/Infusion Pole

The IV Pole is an accessory that attaches to the FLEXiS System.

WARNING **Do not exceed the maximum allowable weight for the IV/Infusion Poles.**

7.9.1 IV/Infusion Pole Weight Load Capacities

Each IV pole assembly is rated to carry a maximum allowable weight capacity without doing any damage to the equipment. With each IV pole addition, the maximum weight capacity for any given pole changes, and loads must be properly distributed to prevent damaging the poles and causing potential equipment failure.

WARNING **It is imperative to take load capacities into account to prevent potential equipment failure. Please strictly follow the guidelines in this section.**

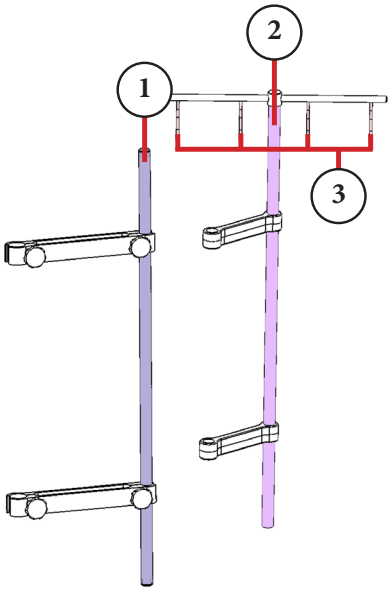

Figure 7.23 - IV Pole Weight Load Capacities

1	Middle Pole
2	IV Pole
3	IV Bag Hooks

Use Figure 5.1 and the chart below to determine the maximum allowable weight limits for your respective configuration.

Item	Single Pole Configuration	Double Pole Configuration	Quad Pole Configuration
1	2.2 lbs (2 kg) per hook	2.2 lbs (2 kg) per hook	2.2 lbs (2 kg) per hook
2	Up to 66 lbs (30 kg)*	Up to 22 lbs (10 kg)*	Up to 22 lbs (10 kg)*
3	--	Up to 66 lbs (30 kg)	Up to 66 lbs (30 kg)

* Subtract 2.2 lbs (2 kg) per IV bag. If there are 4 IV bags, subtract 8.8 lbs (8 kg) from the maximum allowable load capacity.

7.10 Non-Stryker Accessories

There are a multitude of non-Stryker accessories available for attachment to the accessory rails and MFR. Please refer to the manufacturer's instructions for correct installation, removal, and use instructions.

WARNING **Be sure to securely attach accessories to prevent them from falling off.**

WARNING **Never exceed the maximum load capacity for the boom. It is imperative to take into account the weight that is added with each accessory.**

WARNING **Never exceed the maximum load capacity for any of the individual accessories.**

WARNING **Keep accessories that hold fluids away from electric equipment and outlets.**

Note Stryker is not responsible for accessories that are not Stryker brand.

8. Shelf and Handle Installation

A FLEXiS System may be equipped with up to as many as four shelves. One shelf on the boom may have a handle attached that houses the controls for brakes and operating an articulating boom.

Shelves may be added, moved, or removed. They may also be width-adjustable. A single drawer or dual drawer, or a keyboard tray may be attached to a shelf.

WARNING **Remove all equipment from shelves before adjusting.**

Caution **The 750mm shelf has a maximum carrying capacity of 75 lbs. (35 kg), and the 515mm shelf has a maximum carrying capacity of 75 lbs. (35 kg).**

Caution **Do not exceed the maximum allowable weight capacity for the boom with shelves or accessories. See Section 4 for details.**

Caution **Use caution when loosening shelf clamps to prevent the shelf from falling.**

Note Two people may be required when installing and adjusting shelves.

8.1 Adjusting a Shelf

To adjust the position of an installed shelf, perform the following steps:

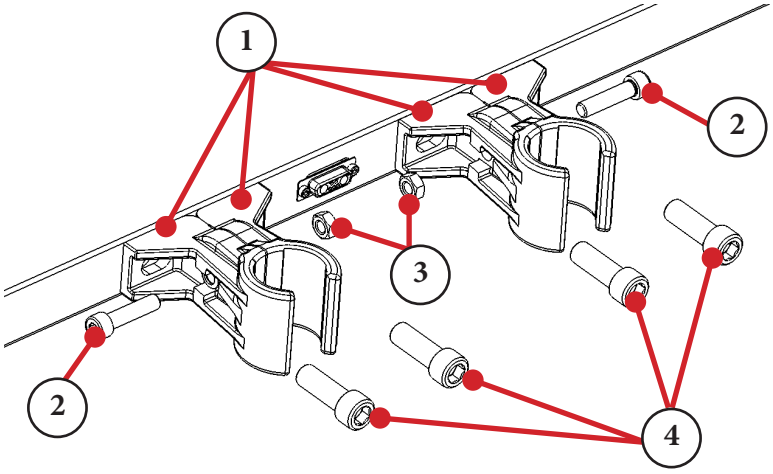

Figure 8.1 - Shelf Assembly

1	Shelf Clamps
2	M8 Clamp Screws
3	Clamp Nuts
4	M12 Mounting Screws

1. Remove all equipment from the shelf.
2. Loosen the M8 screws (Figure 8.1, Item 2) holding the shelf clamps together (Item 1). Do not remove the screws completely. Be sure to keep track of the nuts (Item 3) on the inside of the clamps.

Caution **Be sure to properly support the shelf when clamps are loose.**

3. If shelf does not move easily, slightly loosen the M12 screws (Item 4) until movement is easy. Assistance may be necessary to hold the shelf to prevent it from falling.
4. Move shelf to the new desired location on the MFR.
5. Loosely retighten the M8 screws.
6. Use a level to ensure the shelf is level.
7. Tighten the M8 screws completely. There should not be a gap between the clamp pieces.
8. Tighten the M12 screws completely.

8.2 Installing a Shelf

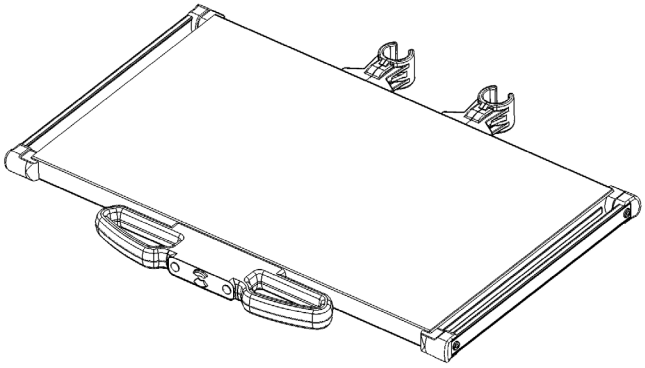

Figure 8.2 - Shelf with handle attached

To install a shelf:

1. Remove the shelf from the packaging. The shelf should include all the parts shown in Figure 8.2 unless it comes without a handle.
2. Assemble the shelf clamps by combining the clamp pieces as shown in Figure 8.1 (Item 1). Use the M8 clamp screw (Item 2) and clamp nut (Item 3) to loosely assemble the clamps.
3. Loosely assemble the M12 mounting screws (Item 2) through the clamps into the shelf.
4. Loosen the clamp screws (Item 1) as much as possible without disassembly.
5. Slide each clamp assembly apart and position the shelf on the MFRs of the FLEXiS System. The clamps should be able to open enough to directly install the shelf to the desired location.
6. Use a level to ensure the clamps can close properly and the shelf is level.
7. Fully tighten the clamp screws (Figure 8.3, Item 1).

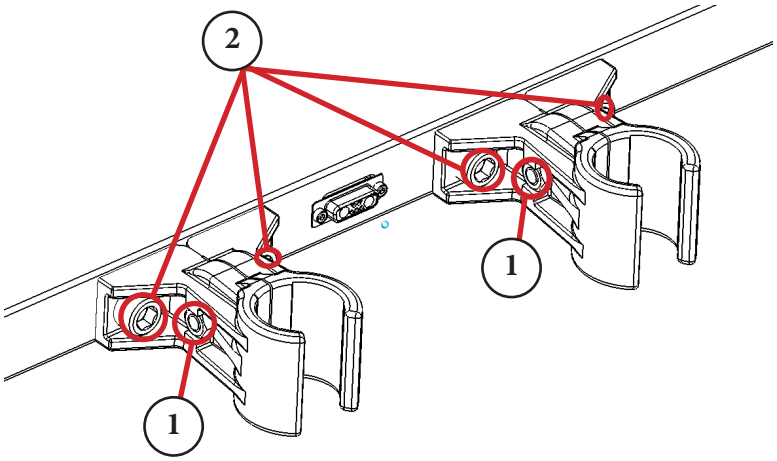

Figure 8.3 - Screw and Nut Locations

8. Fully tighten the mounting screws (Item 2).
9. If the shelf has a handle, connect the control cable from the FLEXiS System to the connector on the back of the shelf.

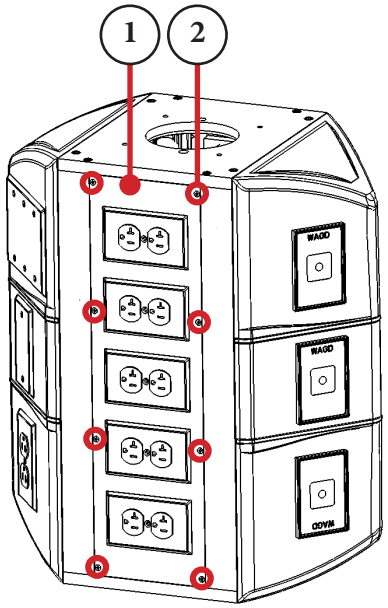

Figure 8.4 - Location of Screws on Access Panel

a. Using a Phillips screw driver, open the access panel (Figure 8.4, Item 1) on the front or back of the FLEXiS System by removing the eight Phillips screws (Item 2).

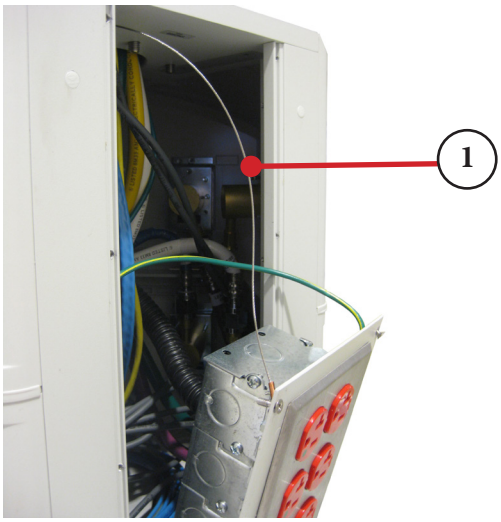

Figure 8.5 - Tether Wire Location

b. The access panel is attached to the FLEXiS System via a tether wire (Figure 8.5, Item 1) inside the system to prevent it from falling when removed. Ensure the panel rests on the tether when it is removed and not on the medical gas hoses.

Figure 8.6 - Control Cable for a Shelf with Handle

c. Locate the control cable connector (Figure 8.6) inside the FLEXiS System.

Figure 8.7 - Data Pass-Through Location

d. Pass the control cable through the data pass-through (Figure 8.7) on the same side as the shelf with handle.

e. Connect the control cable to the shelf and store cable slack inside the FLEXiS System.

8.2.1 Installing Shelf Shims

If upon installation of a FLEXIS shelf it is determined that the shelf is canted to greatly shelf shims can be installed to improve the flatness of the shelf when loaded with medical equipment.

To install shelf shims:

1. Loosen the mounting screws (Item 1) that hold the FLEXIS shelf to the Service Head MFRs but do not fully remove them.

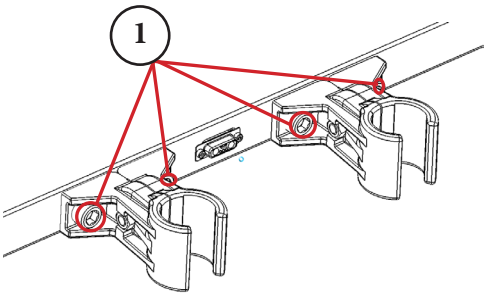

2. Pull the shelf body (shown in pink) away from the clamps, creating a gap between the shelf body and the clamps.

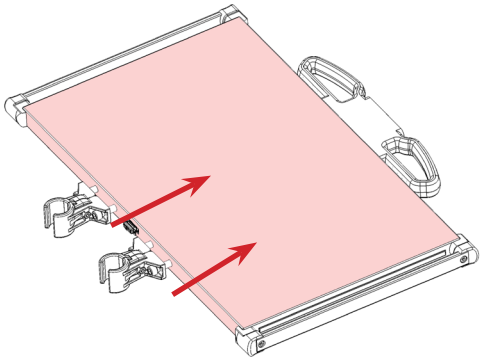

3. Insert the shelf shims (1 per clamp, shown in pink) with the thicker side towards the bottom so that when installed the shelf is canted up. The shims sit over the clamp mounting screws (Item 1 in Step 1).

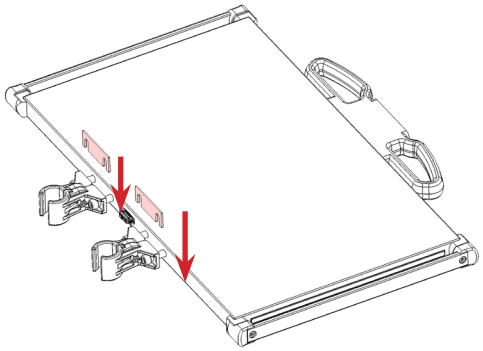

4. Close the gap between the shelf body and the clamps by tightening the clamp screws and then the mounting screws (both are shown in pink below).

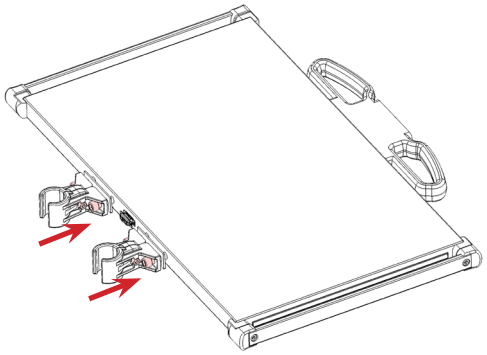

5. The Flexis shelf with shims is now installed.

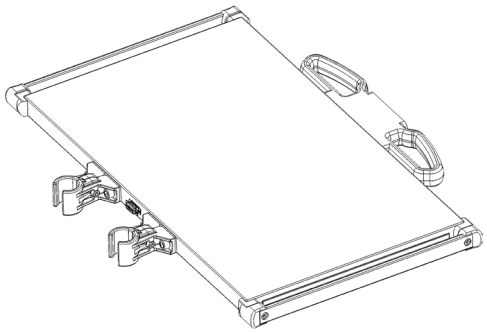

8.3 Handle-to-MFR Bracket Installation

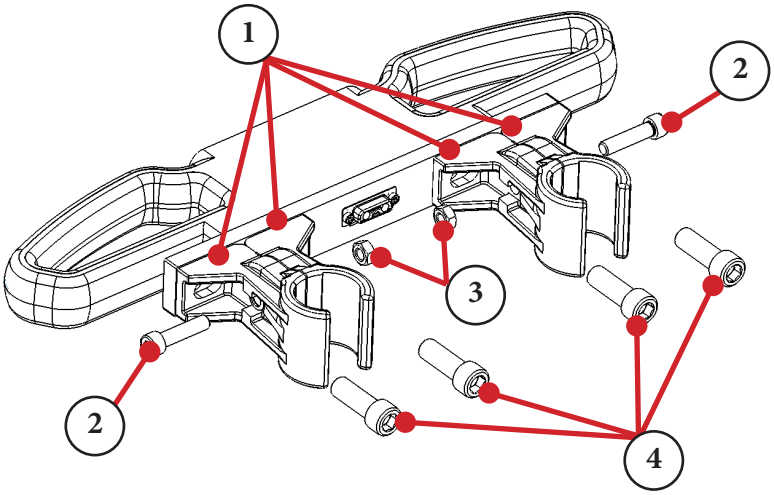

Figure 8.8 - Handle Assembly

1	Shelf Clamps
2	M8 Clamp Screws
3	Clamp Nuts
4	M12 Mounting Screws

1. Remove the handle to MFR bracket and handle from the packaging. The handle with bracket should include all the parts seen in Figure 8.8. The clamps may be disassembled.
2. If the bracket comes with clamps attached skip to Step 5, otherwise assemble the clamps.
   a. Combine the clamp pieces as shown in Figure 8.8 (Item 1). Use the M8 clamp screws (Item 2) and clamp nut (Item 3) to loosely combine the clamps.
   b. Assemble the M12 mounting screws (Item 4) through the clamps into the handle. Do not tighten completely
3. Loosen the mounting screws (Item 4).
4. Loosen the clamp screws (Item 2) as much as possible without disassembly.
5. Slide each clamp assembly apart and position the bracket on the MFRs of the FLEXiS System. The clamps should be able to open enough to directly install the bracket to the desired location.
6. Use a level to ensure the shelf is level.
7. Fully tighten the clamp screws (Item 2).
8. Fully tighten the mounting screws (Item 4).

9. Connect the control cable from the FLEXiS System to the connector on the bracket.

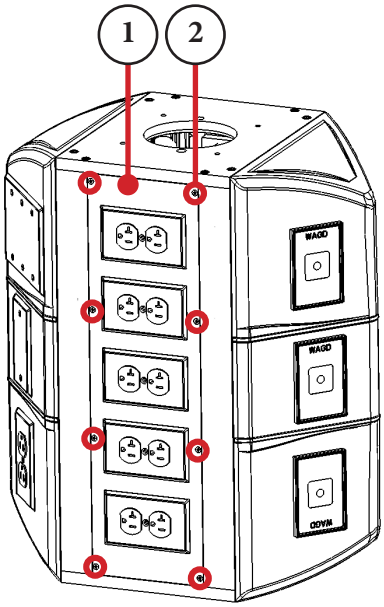

Figure 8.9 - Location of Screws on Access Panel

a. Using a Phillips screw driver, open the access panel (Figure 8.9, Item 1) on the front or back of the FLEXiS System by removing the eight Phillips screws (Item 2).

Figure 8.10 - Primary Control Cable

Figure 8.11 - Secondary Control Cable

b. Locate the control cable connector inside the FLEXiS System. If this handle is the main control interface of the boom use the primary (larger [Figure 8.10]) connector. If this handle is an addition to a shelf control use the extra cord provided with the handle and connect to the secondary (smaller [Figure 8.11]) control cable inside the FLEXiS System.

Note There may be two six-pin connectors inside the unit.

Figure 8.12 - Data Pass-Through Location

c. Pass the control cable through the data pass-through (Figure 8.12) on the same side as the handle.

d. Connect the control cable to the bracket and store cable slack inside the FLEXiS System.

8.4 Handle to FLEXiS Bracket Installation

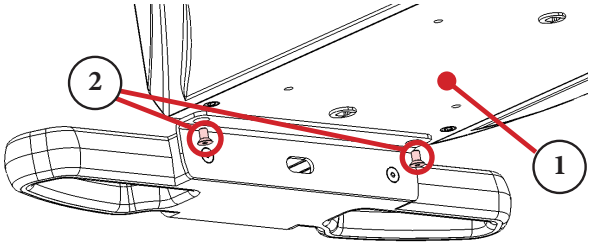

Figure 8.13 - Handle to FLEXiS Bracket

1	Handle and Bracket
2	M3 Mounting Screws

1. Remove the handle to chassis bracket from the packaging. The handle with bracket should include the parts seen in Figure 8.13.
2. Position the handle and bracket under the FLEXiS System (Figure 8.13, Item 1) chassis in the desired location.
3. Install the M5 mounting screws (Item 2) into the bottom plate of the FLEXiS System.
4. Connect the control cable from inside FLEXiS System to the additional cable included with the bracket.

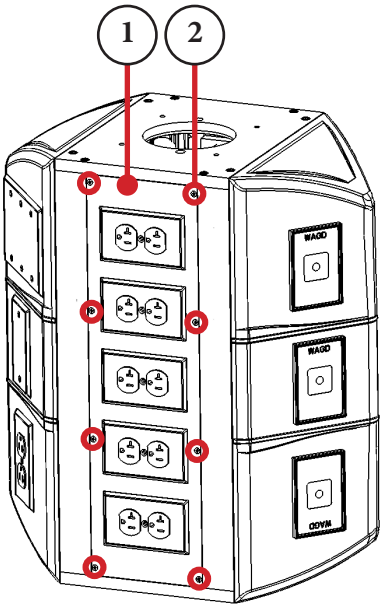

Figure 8.14 - Location of Screws on Access Panel

a. Using a Phillips screw driver, open the access panel (Figure 8.14, Item 1) on the front or back of the FLEXiS System by removing the eight Phillips screws (Item 2).

Figure 8.15 - Secondary Control Cable

b. Locate the control cable (Figure 8.15) connector inside the FLEXiS System.

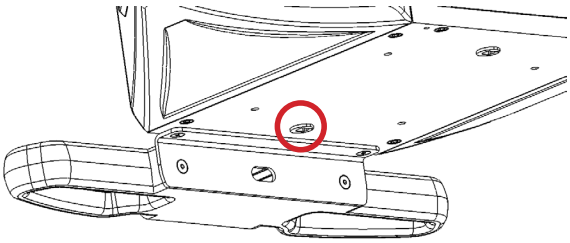

Figure 8.16 - Strain Relief Plug Location

c. Remove the strain relief plug from the bottom of the FLEXiS System (Figure 8.16).

Figure 8.17 - Strain Relief Plug

d. Pass the small end of the cable provided with the handle through the strain relief and into the FLEXiS System.
e. Connect the cable to the secondary control cable inside the FLEXiS System.
f. Connect the cable to the D-sub connector on the bracket.

Caution **It is imperative to ensure there is an appropriate amount of cable prior to installation of strain relief plug, as attempting to remove the strain relief plug could cause damage to the plug and/or cables.**

g. Ensure there is enough slack to reach the desired location of the installed handle or shelf with handle. Install the strain relief plug around the cable and into the bottom of the FLEXiS System.

8.5 Re-sizing an Adjustable Shelf

The Adjustable Shelf can be adjusted from 15” to 26” (380mm to 660mm), and has a carrying capacity of 75 lbs (35 kg).

Caution **Do not exceed the maximum carrying capacity for the adjustable shelf of 75 lbs. (35 kg).**

1. Loosen the four M6 screws on the bottom of the adjustable shelf using a 3mm Allen wrench.

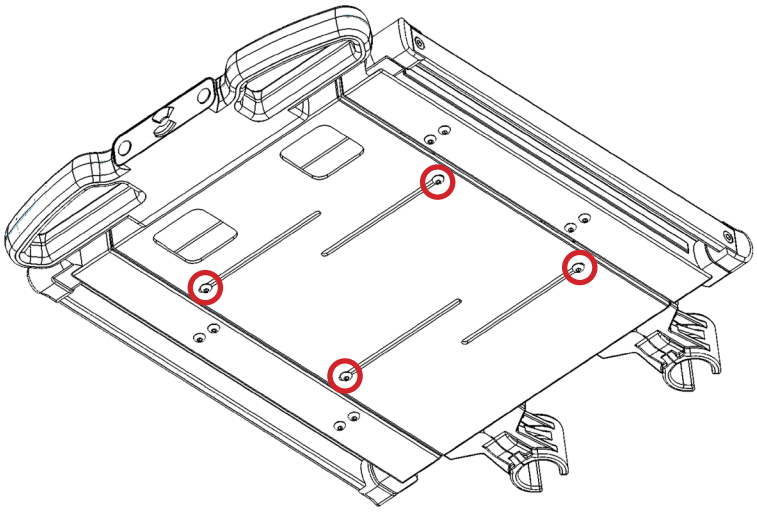

Figure 8.18 - M3 Screw Locations

2. Slide both sides of the adjustable shelf out to the desired width.

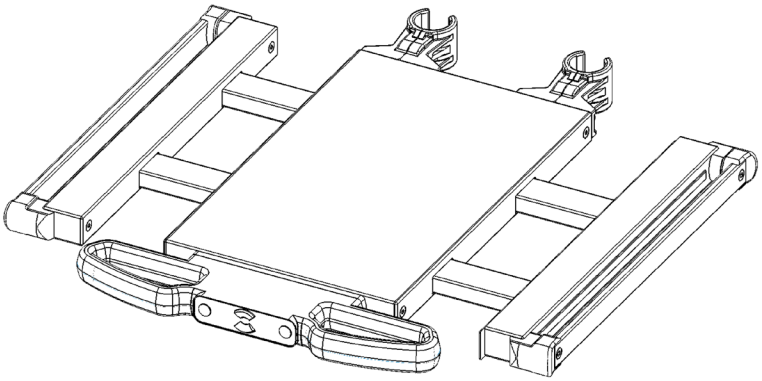

Figure 8.19 - Expanded Shelf Width

3. Fully retighten the four M6 screws on the bottom of the shelf.

Caution **Ensure the equipment placed on adjustable shelves is installed in such a way all four corners of the equipment are supported by the shelf surface.**

8.6 Controls

The controls for the up and down movement (articulating booms only) and boom brakes are located on the front of the handle.

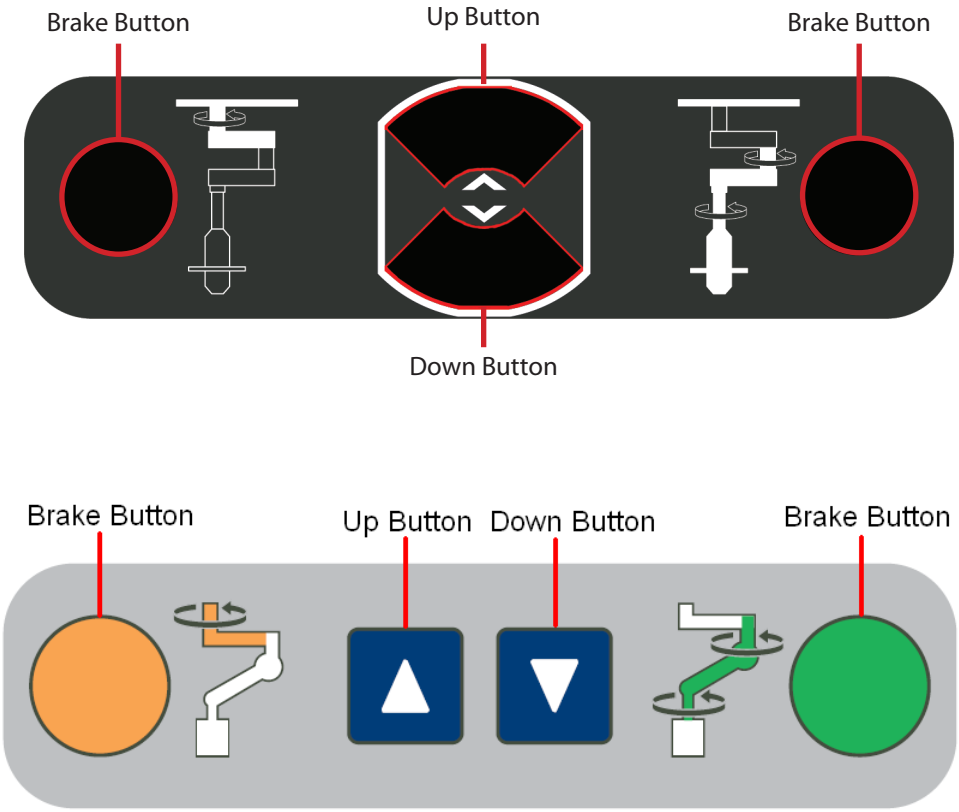

Figure 8.20 - Control Panel (both versions of control interface depicted)

Note The figure above is representative of a FLEXiS control panel containing all available options. Actual buttons and graphics are dependent upon boom type and configuration, and may not be available on all systems.

9.1 Positioning the Boom System

Caution **Adjust the boom position cautiously, ensuring the stops and obstacles are approached slowly to avoid damage to the boom.**

Caution **Prevent collisions with walls and other equipment when maneuvering the boom system.**

9.1.1 Adjusting Horizontal Position

Perform the following steps to adjust the horizontal boom position:

1. Press and hold the brake release button(s), to allow the boom to move freely. A hissing sound can be heard as the brakes are released.

Caution **Failure to release the brakes before moving the boom may result in damage to the pneumatic brake system.**

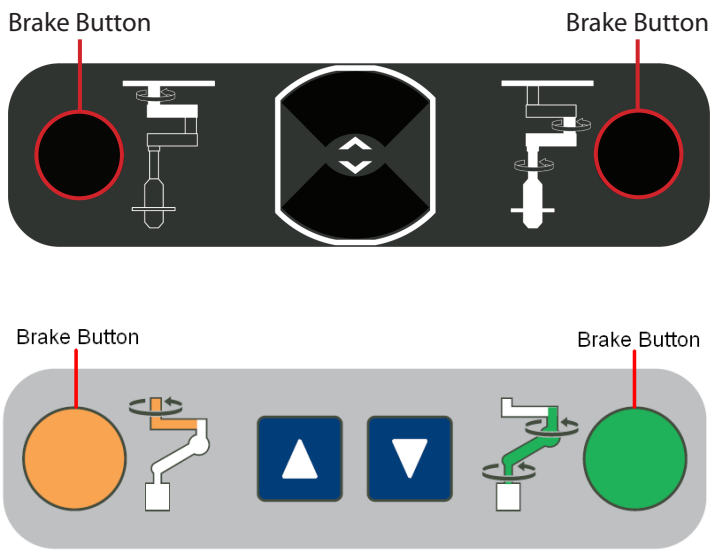

Figure 9.1 - Brake Buttons (both versions of control interface depicted)

Note The number of brake buttons available will be dependent upon boom type. Some booms may only need one brake button. The button on the left rotates the upper arm, while the one on the right rotates the lower arm, as depicted in the diagram.

2. While holding the brake release button(s), move the boom with both hands.
3. When the boom is in position, release the button(s) to hold it into position.

Note Brakes can be released individually by pressing a single button or by simultaneously pressing both buttons to help achieve the desired motion (see Figure 9.1).

9.1.2 Adjusting Vertical Position (Articulating Boom Only)

WARNING **Never position the boom above a patient.**

Caution **Before adjusting the boom's vertical position, ensure that there are no objects in the boom's path.**

To adjust the height of an articulating boom, press and hold the UP button to raise the FLEXiS System, press the DOWN button to lower it, and release the button to stop movement.

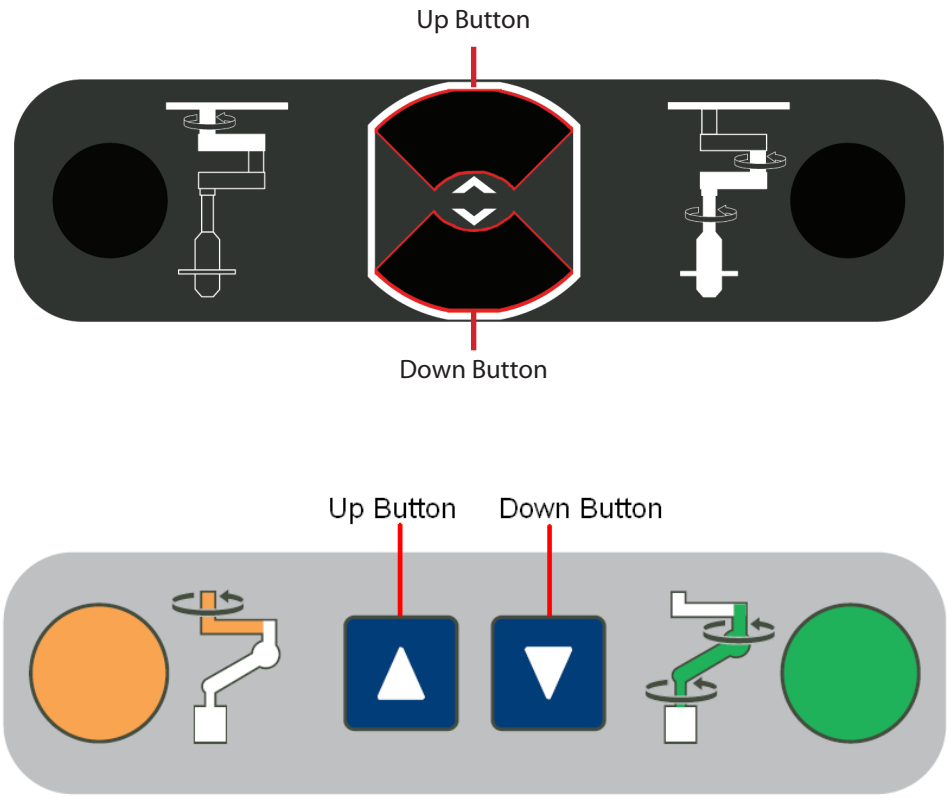

Figure 9.2 - Up and Down Buttons (both versions of control interface depicted)

10. Adjusting the Boom System

10.1 Adjusting the Mechanical Limits

The range of motion (vertical and horizontal) can be adjusted to prevent interference with obstacles, such as walls and other equipment, by adjusting the position of mechanical stops. The mechanical stops were set by Stryker during installation. If further adjustment is necessary, contact your Stryker representative.

10.2 Adjusting the FLEXiS System Brake (OSC400 Only)

FLEXiS Systems without pneumatic brake systems have adjustable friction brakes, which prevent undesired drift. These brakes were adjusted by Stryker during installation, but brake readjustment may be necessary due to brake wear or significant load changes that cause the boom to drift.

To adjust a brake:

1. Remove the collar around the bottom of the drop tube, located directly above the FLEXiS System by pressing in the tabs located on either side of the collar with a flat instrument, such as a flathead screwdriver.

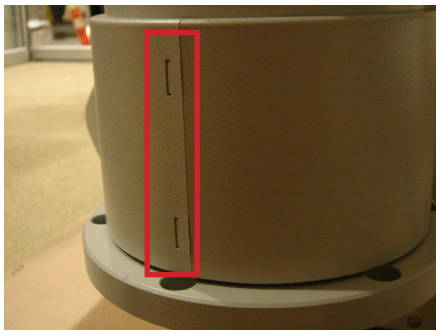

Figure 10.1 - Tab Location

2. Locate the flathead screw on the drop tube and turn it clockwise increase brake friction, or turn it counter-clockwise decrease brake friction.
3. If the boom continues to drift, tighten the brakes further. If it becomes hard to move the boom after tightening the brakes, loosen them a little until movement becomes easier, but the boom doesn't drift.

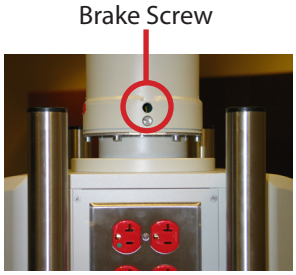

Figure 10.2 - Brake Screw Location

4. Replace the collar by securing the two halves together around the drop tube. Ensure that the deeper lip is on the top to keep dust and other matter from entering the unit.

11. Replacing End Caps

Note When removing the extension arm end cap, be sure to remove the two countersunk screws, securing it in place from the top of the extension arm. Be aware that the ceiling cover may have to be removed in order to access these screws.

1. Orient the cap so that the slotted clips are facing downward and align them with the pins in the extension arm.
2. Push the end cap onto the end of the extension arm, snapping the slotted clips and pin together.
3. Secure the end cap with two countersunk screws.
4. Ensure that the end cap is securely attached to the extension arm.
5. Repeat for each end cap.

Warning **Improper installation may result in the end cap falling into the sterile field.**

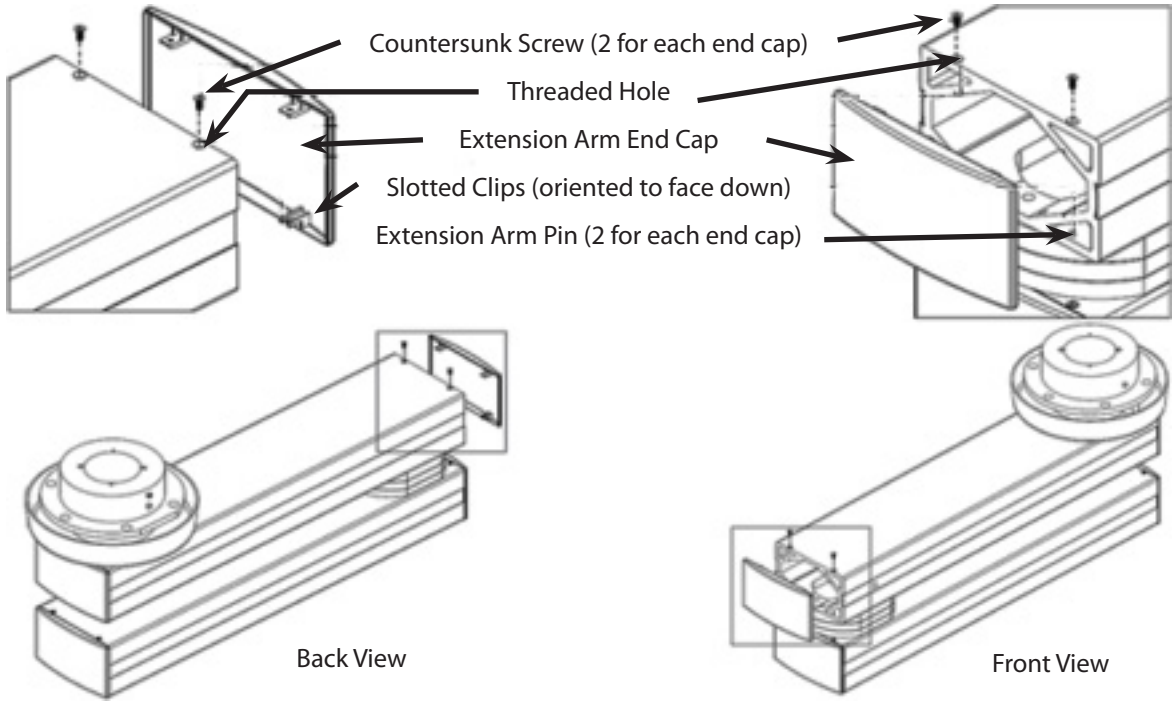

Figure 11.1 - MMP200/OSC600/OSC400 End Cap Installation

12. Cleaning and Disinfecting

Wipe the surfaces with a damp cloth, and if required, a mild cleaning solution.

WARNING **This equipment is not intended to be sterilizable, and as such should not be allowed to enter the sterile field.**

WARNING **Do not allow moisture to enter electrical outlets via spray or using a damp cloth.**

WARNING **Make sure that no fluid enters the system during cleaning.**

Caution **To avoid damage to plastic parts, do not use any scouring, alkaline, acidic, or alcohol-based cleaning agents.**

Caution **Do not use bleach on stainless steel parts.**

Note Cleaning and disinfecting must be performed by trained personnel. Follow the requirements of the national committee responsible for hygiene and disinfection.

13. Troubleshooting

FLEXiS System does not rotate	
Possible Cause	**Solution**
Excessive brake friction (OSC400 only)	Loosen the two brake screws on the sides of the drop tube, located immediately above the FLEXiS System.
Wrong brake release button being pressed	Make sure the correct button is being pressed.

Arms will not move	
Possible Cause	**Solution**
Brakes engaged	Check to make sure that brake buttons are depressed.
Mechanical limits are adjusted incorrectly	Contact a Stryker service representative to have the limits checked.

Boom is drifting	
Possible Cause	**Solution**
Brakes need adjustment	Check brakes from the top of the boom down.
Brakes are not functioning	Make sure that pneumatic brakes are 70 psi (5 bar) of air pressure.

FLEXiS System will not articulate up or down (MMP200 Only)	
Possible Cause	**Solution**
Obstacle in path of the FLEXiS System	Remove obstacle.
Maximum load capacity may be exceeded	Check load rating and remove equipment or accessories as necessary. Check the articulation range against the technical specifications. If FLEXiS System does not move correctly, contact Stryker Technical Support
Hospital power is turned off	Switch on power.
Hospital breaker is tripped	Reset breaker.
Damaged or stuck button on handle	Contact Stryker Technical Support.
Internal damage	Contact Stryker Technical Support.
E-stop may be engaged.	Pull out E-stop button.

FLEXiS System or Boom Arms will not rotate	
Possible Cause	**Solution**
Brakes are engaged	Check to ensure the correct brake button(s) are depressed.
Obstacle in path of FLEXiS System	Remove obstacle.
FLEXiS System is rotated to the physical stops.	Check the range of motion against the technical specifications. If FLEXiS System does not move as intended, contact Stryker Technical Support.
Damaged or stuck button on handle	Contact Stryker Technical Support.
Internal damage	Contact Stryker Technical Support.
Brakes are adjusted too tight (OSC400 only)	Adjust according to Section 10.2, contact Stryker Technical Support.

Unable to stop FLEXiS System or Arm rotation	
Possible Cause	**Solution**
Damaged or stuck button on handle	Contact Stryker Technical Support.
Maximum load capacity may be exceeded	Check load rating and remove equipment or accessories as necessary.
Low or no air pressure to system	Ensure the brake regulator to the FLEXiS System is set to at least 80 psi.
Internal damage	Contact Stryker Technical Support.
Brakes required adjustment (OSC400 only)	Adjust brake friction according to Section 10.2, contact Stryker Technical Support.

No power to FLEXiS System electrical outlets	
Possible Cause	**Solution**
Hospital power is turned off.	Switch on power.
Hospital breaker is tripped.	Reset breaker. Check that equipment does not overload circuit.
Damaged power outlet	Contact Stryker Technical Support.
Internal damage	Contact Stryker Technical Support.

Medical gas pressure too low	
Possible Cause	**Solution**
Medical gas supply line closed	Check gas supply line valves.
Medical gas compressor malfunction	Check gas compressor.
Medical gas supply line set to incorrect pressure	Check gas supply line regulators.
Loose or damaged gas hose connection	Check gas hose connections and external accessories.
Damaged gas outlet	Contact Stryker Technical Support.
Internal damage	Contact Stryker Technical Support.

Shelf is leaning	
Possible Cause	**Solution**
Clamp screws are not tightened	Tighten bolts according to Section 8.2
Shelf max load capacity exceeded	Check load rating and remove equipment or accessories as necessary.
Shelf clamps are installed incorrectly	Loosen shelf clamps and reattach according to Section 8.2.
Damaged shelf or clamps	Contact Stryker Technical Support.

Unable to adjust shelf supports	
Possible Cause	**Solution**
Adjustable shelf screws are tightened	Loosen screws and adjust the supports, retighten screws after adjustment.
Adjustable shelf screws are missing	Reinstall screws into shelf supports through the bottom of the shelf; contact Stryker Technical Support.
Damaged shelf	Contact Stryker Technical Support.
Night Light Does Not Function	
Possible Cause	**Solution**
Faceplate is not lit	Item on faceplate is a sensor and does not light.
Night light does not turn on	Replace light. Check if wires are both (-) or (+) on PCBA.

Note If any of these issues cannot be resolved, please contact Technical Support or your Stryker representative.

14. Technical Specifications

14.1 Environmental Specifications

14.1.1 Operating/Storage Conditions

Operating Humidity:	30%-75%
Operating Temperature	50-104 °F (10-40 °C)
Operating Pressure	500 to 1060hPa

14.1.2 Shipping Conditions

Shipping Humidity	10%-95%
Shipping Temperature	-40-140 °F (-40-60 °C)
Shipping Pressure	500 to 1060hPa

14.2 Electrical Specifications

Rated Input (Branch Circuit Ratings)	U.S./CAN	
		30A max / 230V / 60Hz*
		30A / 120V/ 60Hz
		20A / 230V / 60Hz
		20A / 120V / 60Hz**
		15A / 230V / 60Hz
		15A/120V/60Hz
	International	
		16A / 230V / 50Hz
		20A / 230V / 50Hz*
Rated Output (Branch Circuit Ratings)	U.S./CAN	
		30A max / 230V / 60Hz*
		30A / 120V/ 60Hz
		20A / 230V / 60Hz
		20A / 120V / 60Hz**
		15A / 230V / 60Hz
		15A/120V/60Hz
	International	
		16A max / 230V / 50Hz
		20A max / 230V / 50Hz*
Motor Ratings	230V/450W/50Hz 120V/500W/60Hz	
Electropneumatic	0.5A	

* Maximum rating

** Typical U.S./CAN rating

Caution **The height adjustment in the motor arm is not suitable for continuous use. Do not exceed the maximum operating time of 3 minutes. Allow to rest for 30 minutes after using for a maximum of 3 minutes.**

14.3 Mechanical Specifications

Maximum Horizontal Reach	Articulating Boom: 80 inches (2030mm) Non-Articulating: 96 inches (2440mm)
Standard Braking System	Combination pneumatic and friction
Gas Service	Configurable
Electrical Service	Configurable
Rotation (top arm)	330°
Rotation (FLEXiS System)	340°
Vertical Articulation (for articulating booms only)	17° up, 22° down
Lifting Speed (for articulating booms only)	0.9 inches (23 mm) per second
Shelf Carrying Capacity*	750mm Shelf: 75 lbs (35 kg) 450mm Shelf: 75 lbs (35 kg)
Adjustable Shelf Carrying Capacity*	75 lbs (35 kg)
Drawer Carrying Capacity	22 lbs (10 kg)
Keyboard Support Capacity	Standard Keyboard
Accessory Rail Carrying Capacity*	37 lbs (17.5 kg)
Dual Drawer Carrying Capacity	22 lbs (10kg)
LS Mount Carrying Capacity	165 lbs (75 kg)

* See Section 4 for details

14.3.1 Boom Arm Carrying Capacities

Arm Set	1st Arm Length	2nd Arm Length	Arm Load capacity	Arm Load Capacity for High Seismic Zone	Arm Angle for High Seismic Zone
MMP200	31.5” (800mm)	39.4” (1000mm)	330 lbs (150 kg)	330 lbs (150 kg)	Any Arm Angle
	39.4” (1000mm)	39.4” (1000mm)	330 lbs (150 kg)	330 lbs (150 kg)	Any
OSC400	23.6” (600mm)	--	1279 lbs (580 kg)	Not evaluated for high seismic zones	
	31.5” (800mm)	--	926 lbs (420 kg)	Not evaluated	
	39.4” (1000mm)	--	705 lbs (320 kg)	705 lbs (320 kg)	Any angle
	47.2” (1200mm)	--	573 lbs (260 kg)	573 lbs (260 kg)	Any angle
	23.6” (600mm)	23.6” (600mm)	584 lbs (265 kg)	584 lbs (265 kg)	Any angle
	23.6” (600mm)	31.5” (800mm)	485 lbs (220 kg)	485 lbs (220 kg)	Any angle
	23.6” (600mm)	39.4” (1000mm)	397 lbs (180 kg)	Not evaluated	
	23.6” (600mm)	47.2” (1200mm)	344 lbs (156 kg)	Not evaluated	
	31.5” (800mm)	23.6” (600mm)	478 lbs (217 kg)	478 lbs (217 kg)	Any angle
	31.5” (800mm)	31.5” (800mm)	397 lbs (180 kg)	397 lbs (180 kg)	Any angle
	31.5” (800mm)	39.4” (1000mm)	331 lbs (150 kg)	331 lbs (150 kg)	Any angle
	31.5” (800mm)	47.2” (1200mm)	287 lbs (130 kg)	Not evaluated	
	39.4” (1000mm)	23.6” (600mm)	397 lbs (180 kg)	Not evaluated	
	39.4” (1000mm)	31.5” (800mm)	331 lbs (150 kg)	331 lbs (150 kg)	Any angle
	39.4” (1000mm)	39.4” (1000mm)	287 lbs (130 kg)	287 lbs (130 kg)	Any angle
	39.4” (1000mm)	47.2” (1200mm)	243 lbs (110 kg)	Not evaluated	
	47.2” (1200mm)	23.6” (600mm)	331 lbs (150 kg)	Not evaluated	
	47.2” (1200mm)	31.5” (800mm)	276 lbs (125 kg)	Not evaluated	
	47.2” (1200mm)	39.4” (1000mm)	243 lbs (110 kg)	Not evaluated	
	47.2” (1200mm)	47.2” (1200mm)	198 lbs (90 kg)	Not evaluated	

Arm Set	1st Arm Length	2nd Arm Length	Arm Load capacity	Arm Load Capacity for High Seismic Zone	Arm Angle for High Seismic Zone
OSC600	23.6” (600mm)	--	2125 lbs (964 kg)	Not evaluated for high seismic zones	
	23.6” (600mm)	23.6” (600mm)	988 lbs (448 kg)	594 lbs (270 kg)	45°
	23.6” (600mm)	31.5” (800mm)	818 lbs (371 kg)	581 lbs (264 kg)	45°
	23.6” (600mm)	39.4” (1000mm)	690 lbs (313 kg)	569 lbs (258 kg)	45°
	31.5” (800mm)	--	1545 lbs (701 kg)	Not evaluated	
	31.5” (800mm)	23.6” (600mm)	818 lbs (371 kg)	728 lbs (330 kg)	45°
	31.5” (800mm)	31.5” (800mm)	681 lbs (309 kg)	569 lbs (258 kg)	45°
	31.5” (800mm)	39.4” (1000mm)	580 lbs (263 kg)	557 lbs (253 kg)	45°
	31.5” (800mm)	47.2” (1200mm)	498 lbs (226 kg)	Not evaluated	
	39.4” (1000mm)	--	1215 lbs (551 kg)	697 lbs (316 kg)	Any angle
	39.4” (1000mm)	23.6” (600mm)	690 lbs (313 kg)	Not evaluated	
	39.4” (1000mm)	31.5” (800mm)	580 lbs (263 kg)	557 lbs (253 kg)	45°
	39.4” (1000mm)	39.4” (1000mm)	492 lbs (223 kg)	Not evaluated	
	47.2” (1200mm)	--	955 lbs (433 kg)	Not evaluated	
	47.2” (1200mm)	31.5” (800mm)	485 lbs (220 kg)	Not evaluated	
	47.2” (1200mm)	39.4” (1000mm)	417 lbs (189 kg)	Not evaluated	
	47.2” (1200mm)	47.2” (1200mm)	360 lbs (163 kg)	Not evaluated	

Maximum load capacities will vary depending on the type of boom installed. See Section 4 to understand the load capacity for your boom.

14.3.2 Gas Hose Pressure Specifications

U.S. Specifications

Gas Service	Standard Gauge Pressure
Medical Air	345-350 kPa (50-55 psi)
Carbon Dioxide	
Nitrous Oxide	
Oxygen	
Heliox (He/O2 and O2/He)	
Nitrogen	1100-1275kPa (160-185 psi)
Instrument Air	
Medical - Surgical Vacuum	380mm to 760mm (15 in. to 30 in.) HgV
Waste Anesthetic Gas Disposal (WAGD)	380mm to 760mm (15 in. to 30 in.) HgV May vary with system

International Specifications

Gas Service	Standard Gauge Pressure
Compressed medical gases other than air or nitrogen for driving surgical tools	400^{+100}_{0} kPa
Air or nitrogen for driving surgical tools	800^{+200}_{-100} kPa[a]
Vacuum	≤60[b]
AGSS	Pressure as required for flow specified in EN ISO 7396-2

a/ Regional or national regulations/standards can require a different range.

b/ Absolute pressure.

14.3.2.1 Gas Hose Testing

International Only - Prior to use of the equipment after installation, repair, or replacement of medical gas hoses or outlets the following tests must be performed by properly trained personnel.

For medical gas supply systems perform the following tests according to EN 737-3:

- Test for leakage
- Test for obstruction
- Test for particulate contamination
- Test of gas identity

For anesthetic gas scavenging systems perform the following tests according to EN 737-2

- Test for leakage
- Test of flow and pressure drop

US Only - Prior to use of the equipment after installation, repair, or replacement of medical gas hoses or outlets the gas system must be verified as required by NFPA 99. Verification tests shall be conducted by a party technically competent and experienced in the field of medical gas and vacuum pipeline testing and meeting the requirements of ASSE 6030, *Professional Qualifications Standard for Medical Gas Systems Verifiers*.

14.3.2.2 International Flow and Pressure Drop Characteristics

Maximum pressure drop of 25kPa with a flow rate of 60 l/min and a test pressure of 320 kPa.

14.4 Materials Policy

Stryker Communications guarantees that all equipment including accessories, packaging material, labels, pouches, or other similar items do not contain latex, DEHP, BBP, DBP, or BPA.

14.5 Smoke Rating

Decorative parts with area less than 10 sq. ft. were tested for Flame Spread and Smoke Developed. The material has a flame spread rating of 200 or less and, unless otherwise marked, a smoke developed rating of 200 or less.

Potentially applicable smoke ratings are as follows:

- Romira Romiloy ABS/PC8170 - Smoke Index over 500 and Calculated to be 996.5
- Romira Romiloy ABS/ PC 9170 - Smoke Index over 500 and Calculated to be 897.8
- GE Cycoloy C6200 GY9A077 – Smoke Index over 500 and Calculated to be 803.3

14.6 EMC Specifications

Guidance and manufacturer's declaration - electromagnetic emissions		
The FLEXiS System is intended for use in the electromagnetic environment specified below. The customer or the user of the Visum® LED Surgical Light System should assure that it is used in such an environment.		
Emissions test	**Compliance**	**Electromagnetic environment - guidance**
RF emissions CISPR 11	Group 1	The FLEXiS™ uses RF energy only for its internal function. Therefore, its RF emissions are very low and are not likely to cause any interference in nearby electronic equipment.
RF emissions CISPR 11	Class B	The FLEXiS™ is suitable for use in all establishments other than domestic and those directly connected to the public low-voltage power supply network that supplies buildings used for domestic purposes.
Harmonic emissions IEC 61000-3-2	Class A	
Voltage fluctuations/ flicker emissions IEC 61000-3-3	Complies	

Guidance and manufacturer's declaration - electromagnetic immunity			
The FLEXiS™ is intended for use in the electromagnetic environment specified below. The customer or the user of the FLEXiS™ should assure that it is used in such an environment.			
Immunity test	**IEC 60601 test level**	**Compliance Level**	**Electromagnetic environment - guidance**
Electrostatic discharge (ESD) IEC 61000-4-2	± 6 kV contact ± 8 kV air	± 6 kV contact ± 8 kV air	Floors should be wood, concrete, or ceramic tile. If floors are covered with synthetic material, the relative humidity should be at least 30%.
Electrical fast transient/burst IEC 61000-4-4	± 2 kV for power supply lines ± 1 kV for input/output lines	± 2 kV for power supply lines ± 1 kV for input/output lines	Mains power quality should be that of a typical commercial or hospital environment.
Surge IEC 61000-4-5	± 1 kV line(s) to line(s) ± 2 kV line(s) to earth	± 1 kV line(s) to line(s) ± 2 kV line(s) to earth	Mains power quality should be that of a typical commercial or hospital environment.
Voltage dips, short interruptions and voltage variations on power supply input lines IEC 61000-4-11	<5 % U_T (>95 % dip in U_T) for 0,5 cycle 40 % U_T (60 % dip in U_T) for 5 cycles 70 % U_T (30 % dip in U_T) for 25 cycles <5 % U_T (>95 % dip in U_T) for 5 s	<5 % U_T (>95 % dip in U_T) for 0,5 cycle 40 % U_T (60 % dip in U_T) for 5 cycles 70 % U_T (30 % dip in U_T) for 25 cycles <5 % U_T (>95 % dip in U_T) for 5 s	Mains power quality should be that of a typical commercial or hospital environment. If the user of the FLEXiS™ requires continued operation during power mains interruptions, it is recommended that the FLEXiS™ be powered from an uniterruptible power supply or battery.
Power frequency (50/60 Hz) magnetic field IEC 61000-4-8	3 A/m	3 A/m	Power frequency magnetic fields should be at levels characteristic of a typical location in a typical commercial or hospital environment.

Note U_T is the a.c. mains voltage prior to application of the test level.

Guidance and manufacturer's declaration - electromagnetic immunity			
The FLEXiS™ is intended for use in the electromagnetic environment specified below. The customer or the user of the FLEXiS™ should assure that it is used in such an environment.			
Immunity test	**IEC 60601 test level**	**Compliance Level**	**Electromagnetic environment - guidance**
Conducted RF IEC 61000-4-6 Radiated RF IEC 61000-4-3	3 Vrms 150 kHz to 80 MHz 3 V/m 80 MHz to 2,5 GHz	3 Vrms 3 V/m	Portable and mobile RF communications equipment should be used no closer to any part of the FLEXiS™, including cables, than the recommended separation distance calculated from the equation applicable to the frequency of the transmitter. Recommended separation distance $d = 1{,}2\sqrt{P}$ $d = 1{,}2\sqrt{P}$ 80 MHz to 800 MHz $d = 2{,}3\sqrt{P}$ 800 MHz to 2,5 GHz where P is the maximum output power rating of the transmitter in watts (W) according to the transmitter manufacturer and d is the recommended separation distance in metres (m). Field strengths from fixed RF transmitters, as determined by an electromagnetic site survey,a should be less than the compliance level in each frequency range.b Interference may occur in the vicinity of equipment marked with the following symbol: 

Recommended separation distances between portable and mobile RF communications equipment and the FLEXiS™			
The FLEXiS™ is intended for use in an electromagnetic environment in which radiated RF disturbances are controlled. The customer or the user of the FLEXiS™ can help prevent electromagnetic interference by maintaining a minimum distance between portable and mobile RF communications equipment (transmitters) and the FLEXiS™ as recommended below, according to the maximum output power of the communications equipment.			
Rated maximum output power of transmitter W	**Separation distance according to frequency of transmitter m**		
	150 kHz to 80 MHz	**80 MHz to 800 MHz**	**800 MHz to 2,5 GHz**
	$d = 1{,}2\sqrt{P}$	**$d = 1{,}2\sqrt{P}$**	**$d = 2{,}3\sqrt{P}$**
0,01	0,12	0,12	0,23
0,1	0,38	0,38	0,73
1	1,2	1,2	2,3
10	3,8	3,8	7,3
100	12	12	23

For transmitters rated at a maximum output power not listed above, the recommended separation distance d in metres (m) can be estimated using the equation applicable to the frequency of the transmitter, where P is the maximum output power rating of the transmitter in watts (W) according to the transmitter manufacturer.

Note At 80 MHz and 800 MHz, the separation distance for the higher frequency range applies.

Note These guidelines may not apply in all situations. Electromagnetic propagation is affected by absorption and reflection from structures, objects and people.

15. Maintenance

Note Tests and maintenance must be performed by qualified personnel.

Use the following table as a guide for inspection:

Hospital Personnel Responsibility Every 6 months	Maintenance Performed by Stryker Every Other Year*
• Visually inspect paint for damage • Cracks on plastic parts • Deformation of the system • Loose Parts	• Connections and markings • Anesthetic gas conduction systems • Check gas hoses for cracks, leaks, or other damage • Check gas hose manufacture test date. Replace the hose after 10 years from the test date. • Pneumatic brake function • Properly tighten brake screws (OSC400 only)

* Please contact Stryker Technical Support or your Stryker Representative to schedule your preventative maintenance service.

Contact Stryker Communications in case of:

- Faults
- Damage
- Service Needs

Caution **Use only Stryker original parts. Use of non-Stryker parts will void warranty.**

15.1 Replacing a Fuse

This section only applies to articulating booms equipped with an Emergency Stop.

To change a fuse:

1. Open the fuse holder by turning the top cover with a flat head screw driver.
2. Once the cover is open, remove the old fuse and replace it with a new one.
3. Close the cover and turn it back to the locked position with a flat head screw driver.

Note Use only Bussman, MDQ Series, 10A, 250V fuses.

Expected life is defined as the time that a device is expected to remain safe and functional after it is placed into use. The expected life of the FLEXiS Boom System is 7 years from the date of product installation. Additionally, the expected life of any accessory sold by Stryker for use with the FLEXiS Boom System is seven years from the installation date of the Boom System. Within this time period, Stryker will support the product by offering repair or replacement in accordance with the warranty or at customer expense, as applicable.

16. Disposal of the Product

The device must be disposed of according to local laws and hospital practices.

Local regulations may include specifications regarding the disposal of this product. We request that you contact Stryker when you plan to withdraw this device from service with the intention of discarding it.

16.1 Metals and Plastics

When disposing of a product or replacing any of its parts, check the recyclability of each item. When recycling plastic parts, determine the material type. For more information about recycling, contact your local waste management facility or visit related sites on the internet. Below are recycling symbols, which are marked on parts made of plastic. Products marked with these symbols can be used as energy waste.

17. Stryker Limited Warranty

This warranty applies to customers in the United States only. Outside of the USA, contact your Stryker sales representative or your local Stryker subsidiary.

Stryker warrants that its products shall be free of defects of material and workmanship for a period of two years after date of installation. Stryker will provide all parts and service required to restore equipment under warranty to good working condition, which may include shipment of replacement parts and phone service consultation to conduct minor repairs.

Any modifications to this warranty policy are not valid unless made with explicit written approval of Stryker.

This warranty covers all Stryker products with the exception of bulbs, sterilizable handles, filters and any other disposable parts.

This warranty does not cover any cosmetic or superficial damage to product. Any modification to product by Customer without the approval of Stryker will immediately void this warranty in its entirety.

This warranty covers only Stryker products and only such products that were installed and/or maintained by Stryker authorized personnel.

This warranty is valid only to the original purchaser of Stryker products directly from a Stryker authorized agent. The warranty cannot be transferred or assigned by the original purchaser.

18. Damage Claims

Shipping is FOB Origin. Title transfers to customer upon shipment. Stryker assumes responsibility for loss or damage during shipping. Please contact Technical Support (866) 841-5663 for inside the U.S., (972) 410-7100 for international, or your Stryker representative if your shipment is lost or damaged.

If you need to return any item, contact Customer Service for an RMA number. After receiving an RMA number, package the item as described by Customer Service. Ship the item to the following address:

Stryker Communications

(RMA#_____)

1410 Lakeside Parkway #100

Flower Mound, TX 75028

Toll Free (inside the U.S): (877) 789-8106

International: (972) 410-7100

19. Contact Information

Contact Stryker Customer Service with questions or concerns.

Stryker Communications
1410 Lakeside Parkway #100
Flower, Mound, TX 75028
Toll Free: (866) 841-5663
1-972-410-7100

For international service locations, refer to the Stryker website at the following URL: **www.stryker.com**.

stryker®

Joint Replacements

Trauma, Extremities & Deformities

Craniomaxillofacial

Spine

Biologics

Surgical Products

Neuro & ENT

Interventional Pain

Navigation

Endoscopy

Communications

Imaging

Patient Handling Equipment

EMS Equipment

Rehabilitation Services

Stryker Communications
1410 Lakeside Pkwy.,
Flower Mound, TX 75028
t: 972.410.7100

www.stryker.com

EC REP Stryker France S.A.
ZAC Satolas Green
Avenue de Satolas Green
69881 Meyzieu Cedex
France

CE 0197